Example Foundation & Floor Plan

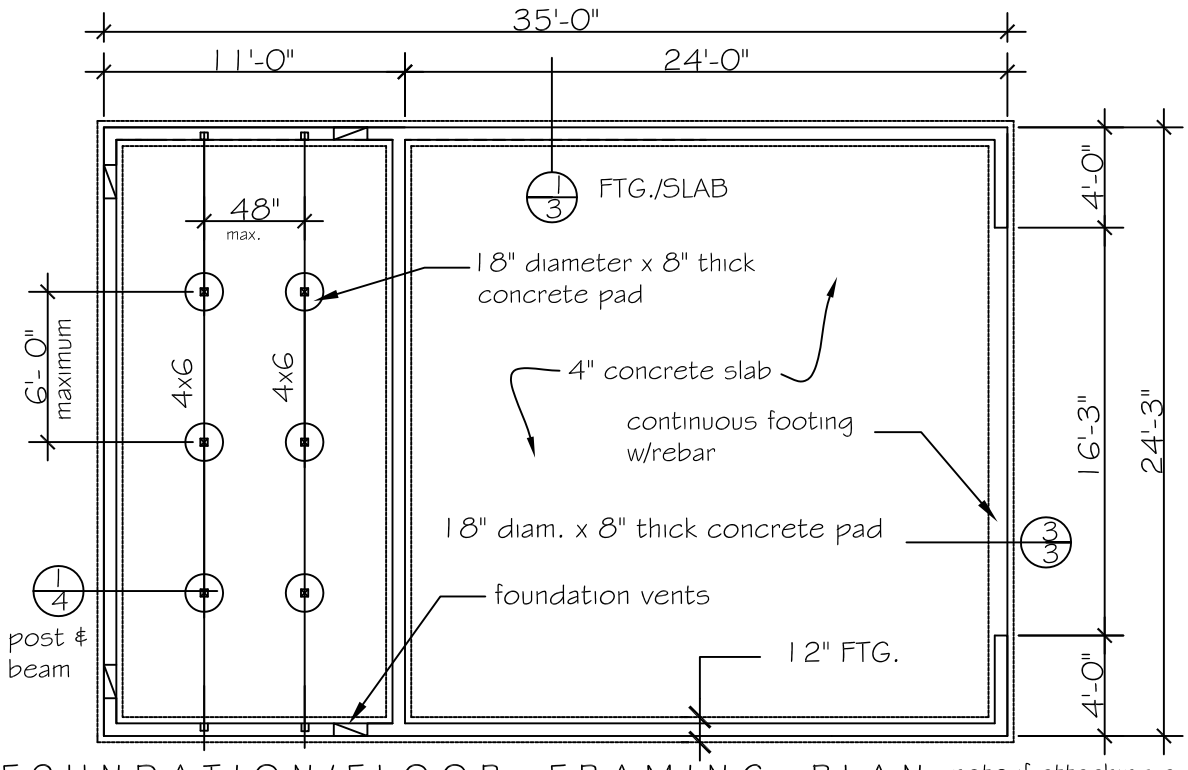

1/11 FOUNDATION/FLOOR FRAMING PLAN

scale- 1/4" = 1'-0" (REDUCED SCALE EXAMPLE)

note: if attaching addition to an existing residence, show adjoining rooms of existing home

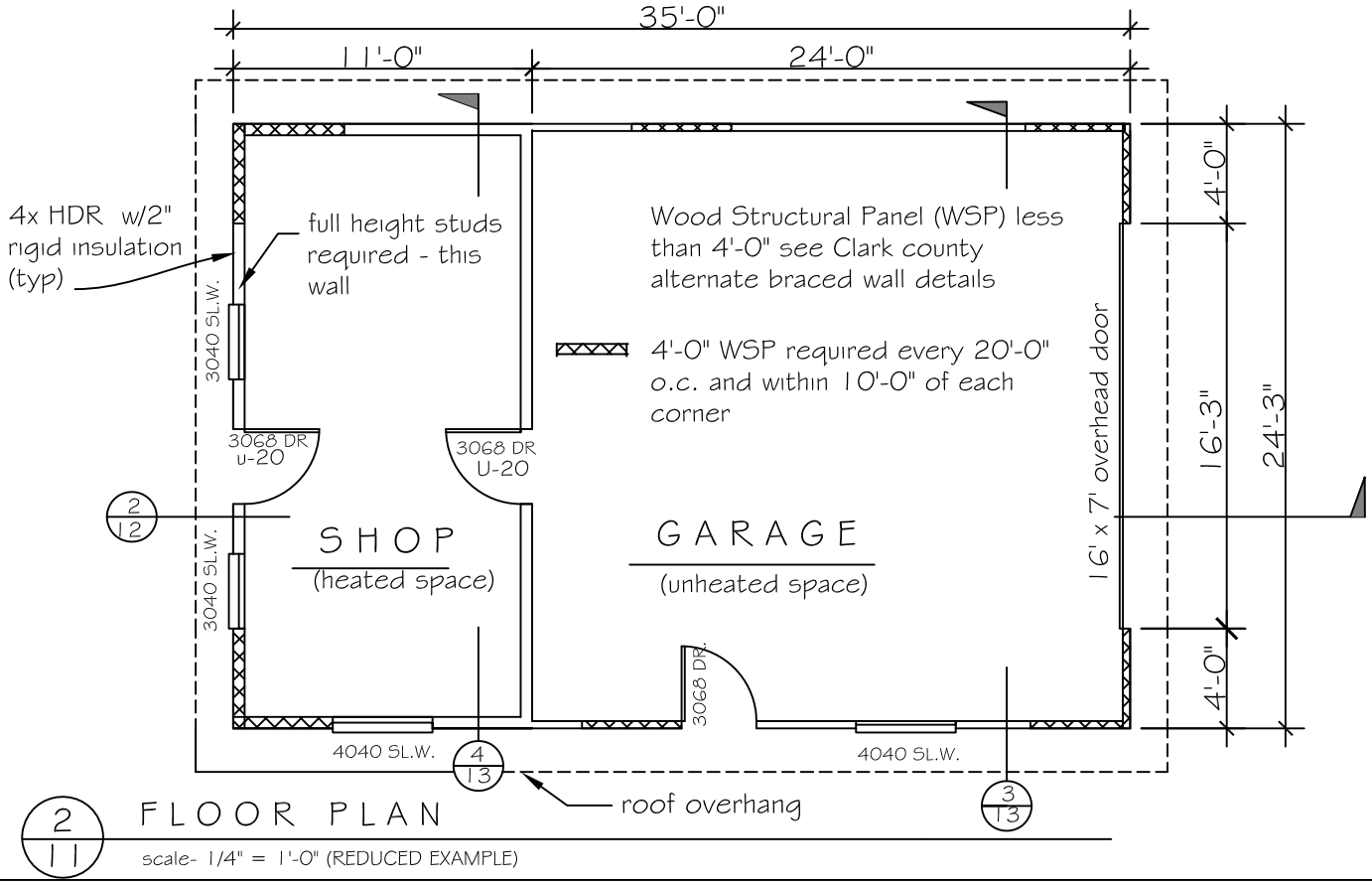

2/11 FLOOR PLAN

scale- 1/4" = 1'-0" (REDUCED EXAMPLE)