U.S. Department of Housing and Urban Development
PD&R Office of Policy Development and Research

Residential Remodeling and Universal Design

Making Homes More Comfortable and Accessible

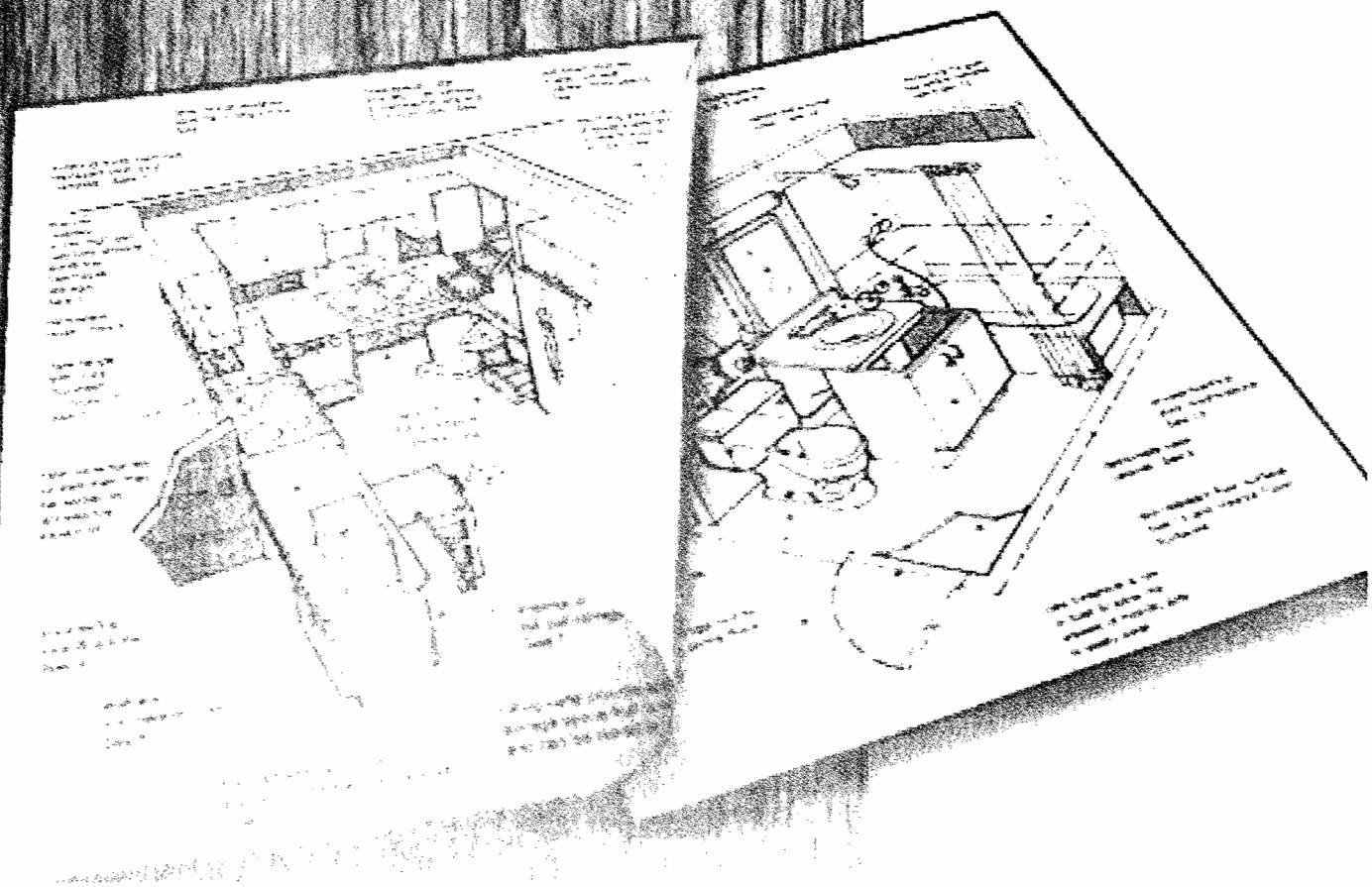

Residential Remodeling and Universal Design Making Homes More Comfortable and Accessible

Prepared for:
U.S. Department of Housing and Urban Development
Office of Policy Development and Research

Prepared by:
NAHB Research Center, Inc.
Upper Marlboro, MD

Barrier Free Environments, Inc.
Raleigh, NC

May 1996

Notice

Although the information in this publication is believed to be accurate, the authors are solely responsible for the contents. The publication does not necessarily reflect the views or policies of the U.S. Department of Housing and Urban Development or the U.S. Government. The NAHB Research Center has made every effort to verify the accuracy and appropriateness of the materials. The recommendations were developed for voluntary use in private homes. They were not designed to comply with mandatory accessibility standards, regulations, or laws. The products listed in the manual are included only as examples of some available products. No endorsement, recommendation, or evaluation of these products or their use is given or implied.

FOREWORD

Rehabilitation and Remodeling of the existing housing stock plays a key role in providing our Nation with decent and affordable housing. Often, when a house or apartment is renovated, it can also be made more accessible for people with disabilities. Given growing awareness of the needs of people with disabilities, and the aging of the "baby boom" generation, it makes good sense to ensure that, through "Universal Design", more housing addresses the needs of all Americans.

The term "Universal Design" refers to designs and features that make housing usable by persons with a broad range of needs. Many universal design features can be added to the home during a remodeling project at little or no extra cost. *Residential Remodeling and Universal Design: Making Homes More Comfortable and Accessible*, provides guidance on selecting and installing universal features that will improve the home for its residents now and in the future and will increase the home's marketability.

I am please to present this publication in the hope that both property owners and remodelers will find it helpful in creating comfortable and functional housing that will occupy a place at the leading edge of the market in the 21st century.

Michael A. Stegman
Assistant Secretary for Policy
Development and Research

Acknowledgements

This publication was prepared by the NAHB Research Center, Inc. through funding provided by the U.S. Department of Housing and Urban Development, Office of Policy Development and Research. Barrier Free Environments, Inc. produced the graphics and the majority of accompanying text and notes. Building Technology, Inc., Silver Spring, MD, provided technical assistance on multi-family housing issues. Special appreciation for their in-depth review and professional suggestions is extended to the following publication reviewers: Christian Yost, M. Yost, Construction Consultant and Remodeler, Stratham, NH; Allan Browne, Extended Home Living Services, Inc., Northbrook, IL; Ronald G. Nickson, National Multi Housing Council, Washington, D.C..

Special acknowledgements to: Alan Rothman, U.S. Department of Housing and Urban Development, who originated the concept for this publication and provided technical guidance throughout the project; Carol Schaake, NAHB Research Center, Ron Mace and Rex Pace, Barrier Free Environments, Inc., for their commitment to the success of the project and its impact on universal design.

CONTENTS

INTRODUCTION 1

For Remodelers and Contractors 1
For Homeowners 1

UNIVERSAL DESIGN 2

What is *Universal Design*? 2
Who Benefits From a Home With These Features? 2
Universal Design, Adaptable Design, Accessible Design in Homes 3
Universal Design in Residential Remodeling 3
Low-Cost, Easily Installed Universal Designs: *More Bang for the Buck* 3
Different Types of Remodeling and Universal Design Features 4

INSTALLING UNIVERSAL DESIGN FEATURES TO IMPROVE EXISTING HOMES 5

How to Use This Publication 5
Entrances 7
Doors 19
Kitchens 29
Bathrooms 43
Laundry Areas 57
Clothes Closets 65
Interior Stairs 73
Windows 81
Interior Floor Surfaces 87
Controls and Signals 93
Decks and Patios 101
Parking and Walks 109

APPENDIX A: Accessibility Standards A-1

APPENDIX B: Guidebooks and Other References B-1

APPENDIX C: Resources C-1

INTRODUCTION

Universal features in homes make sense. Universally designed products, building features, and spacial techniques help people function more independently regardless of age, size, stature, or ability. Many universal design features can be added to a home during a home remodeling or rehabilitation project at little or no extra cost. Addition of these features will improve the home for its residents now and in the future, as well as increase its marketability.

For Remodelers and Contractors

Universal design need not be a complicated concept. Most universal features are standard building elements that are placed differently (lowered light switches), selected more carefully (faucet handles), or re-dimensioned (doorways). Some products, designs, and installation techniques may be new to you or your sub-contractors. We recommend that you tell your sub-contractors exactly what you want done and why, to avoid misunderstandings.

This book provides technical guidance on selecting and installing universal features during typical remodeling or rehabilitation projects. The book will help you illustrate the designs and their benefits to your clients.

For Homeowners

This guide suggests products and designs conceived to create comfortable, functional environments for everyone regardless of age or ability. The ideas are described and illustrated to assist you and your remodeler in planning your home modification project. As you scan this guide we are sure you will find features that will benefit your household now and in the future. These improvements will help position your home on the leading edge of the existing housing market in the 21st century!

The ideas in this book are intended for use in remodeling private homes. Their purpose is to help make the average home more functional and easier for everyone to use. The suggested features do not necessarily provide home access for all people with specific physical limitations. If you plan to modify your home to meet a resident's specialized needs, you and your remodeler will need to consult materials more specifically related to those needs. We recommend that you review federal, state, and local accessibility standards and codes as well as other publications and guides that provide more detailed specifications for creating accessible homes. Although compliance with accessibility standards is not required in private homes, the standards, as well as other publications, provide valuable guidance for creating totally accessible homes. The standards are listed in *Appendix A* and other printed materials are in *Appendix B* and *Appendix C*.

UNIVERSAL DESIGN

What is *Universal Design*?

Universal design is a developing approach to creating liveable, marketable environments for everyone as common practice in design. It is *inclusionary design* that applies to spaces, features, and products to maximize the number of people who can function independently in a particular environment. Universal design considers human needs and abilities throughout the lifespan. It attempts to meet the needs of people of all ages, sizes, and abilities. This concept includes the older, more narrowly focused concepts of barrier free and accessible design, but eliminates the stigma and special appearance to ensure marketability. It is often called *life-span design*, *inclusive design*, or *trans-generational design*.

Universal designs are not special. Incorporating universal features into a home during a typical remodeling or rehabilitation project will not change the appearance of the home nor necessarily increase the project cost. Useful products are generally available through standard distribution channels. As the market increases, universal elements will be more prominently displayed in home improvement stores. Many quality products on the market today accomplish universal design goals. For example, quality slider or double-hung windows that open and close easily make installation of specially designed windows for people with severely limited strength unnecessary.

Who Benefits From a Home With These Features?

Most residents. Universal designs serve the entire population regardless of age, stature, size, or physical ability. Traditional homes designed for *average* families may limit the independence or functionality of some residents. Kitchen counters are too low for very tall individuals and too high for short people. Light switches are too high for both a 3-year-old and an older person with limited reach. Rotating door handles and faucets cannot be turned by people with arthritic hands. Not only do wheelchairs not fit through most interior doorways, but furniture is also harder to move around. Thresholds can be an impediment to people using crutches, canes, or walkers, as well as to tiny and old shuffling feet. Bathtubs and showers are slippery and typically provide nothing to grasp. Homes that *fit* during young and middle years are often inappropriate for older years.

It makes sense to consider now how the home will fit the needs of older residents. Surveys show most of us want to grow old at home. Today, over 12 percent of the U.S. population is over 65. Census projections estimate in 30 years, more than 20 percent of us will be over 65. And in 40 years, the over-85 population is expected to triple. The market for homes with universal features that allow older people to remain at home and independent will likely increase. Homeowners should consider including universal features during home remodeling projects both to meet the new market and to ensure their own comfort in later years. Many universal concepts are modifications of designs originally conceived to help people with physical limitations live more independently. Currently, 49 million people have a physical disability. Most have impaired mobility or dexterity, including 37 million people with arthritis (21 million under age 65). Many others will experience at least temporary disabilities and could also benefit from these features.

Universal Design, Adaptable Design, and Accessible Design in Homes

Universal features, products, and designs create homes that are accessible for more people than typical homes. Furthermore, universally designed homes can be easily adapted to meet special needs. A fully accessible home of the past typically included appliances, specialized features, and accommodations that made the home look different and cost more than usual. Homes with universal features look no different than neighboring homes and are often no more expensive. Universal design does not produce a special home environment, but rather provides spaces and features that are usable by more people and can be adjusted to meet individual needs.

Universal Design in Residential Remodeling

There can be two reasons to include universal design features in a home. One is to meet an immediate need; the other is to plan ahead to make the home better fit household needs now and for the future as part of normal home up-grade or remodeling projects.

Home modifications required to meet an immediate need are typically undertaken out of desperation—to accommodate an elderly relative, a special physical need, or a temporary disability. Planning is done quickly and without adequate research. Budget limitations allow for few trade-offs. Work is accomplished in haste, without time for cost efficiencies.

Planning for aging and potential market edge, comes from far-sighted homeowners who anticipate their own, their family's, and guests' possible future physical limitations and changing needs. These individuals incorporate select universal products and designs as they up-date or remodel their homes. The costs of their remodeling projects are not necessarily higher as they create marketable, attractive, comfortable homes for a lifetime.

Low-Cost, Easily Installed Universal Features: *More Bang for the Buck*

Some methods to make a home more functional for everyone should be considered in home remodeling projects. The cost and difficulty involved in these procedures is often small when compared to their benefits. Modifications of this type include:

- use of lever handle door hardware and faucets;
- installation of large rocker-style light switches;
- use of extra lighting where necessary;
- installation of hand-held flexible shower fixtures;
- installation of new electrical outlets and telephone jacks (when needed) no lower than 15 inches above the floor surface and of new light switches between 36 inches and 48 inches above the floor surface; and,
- use of adjustable hanging closet rod and shelf systems.

Different Types of Remodeling and Universal Design Features

Home modification projects may vary in size and complexity from a simple one-for-one replacement (a new screen door) through gut rehabilitation (foundation and exterior walls remain and interior is reconstructed). Builders and remodelers can add universal design features during any phase in this continuum.

How can homeowners select from among products and designs to make their homes more comfortable for everyone, match their changing life style, accommodate their aging and increasing physical limitations, or increase the home's market appeal? Is there a formula? Keep in mind the goal of universal design is to increase the degree to which individuals can be independent, and comfortable in the home.

1. Add modifications necessary to meet the unique needs of your household.
2. Include relatively inexpensive features that are helpful for everyone and can be included during any rehabilitation or remodeling project.
3. Consider cost. Although many universal designs would increase the value of your home, this may not fully compensate for added cost. You should base your decisions on the degree to which you can afford the modification.
4. Depending on the extent of your remodeling project:

    - Consider widening doorways to allow for a 32-inch clear opening. Front door and bathroom door are most important.
    - Create a clear, level circulation route through the home. Be mindful of turning radius dimensions if you are planning for wheelchair access.
    - If you are changing the footprint of the home and can afford it, consider enlarging the bathroom and widening doorways and hallways.
    - If you are remodeling your kitchen, consider adding an adjustable or lower counter to increase usability (i.e. for a child or seated individual).

5. If you want to make your home totally wheelchair accessible (or accessible for people with specific physical limitations), technical information in the accessibility standards listed and described in *Appendix A* will provide guidance. Resources referenced in *Appendix B* and *C* offer additional assistance.

INSTALLING UNIVERSAL DESIGN FEATURES TO IMPROVE EXISTING HOMES

How to Use This Publication

The remaining sections of this book provide technical information regarding specific universal design products, features, and spatial techniques and suggested methods for their installation in typical remodeling projects. We recommend that remodelers study and envision the concepts first and later discuss with the client appropriate designs and features for a specific project. Most likely the client will not be familiar with the universal design approach and its benefits, and will depend on the remodeler's guidance.

Each section begins with a graphic overview illustrating common barriers in one area of the home. The graphics are meant to highlight specific *features* of the area and not the lay-out. A second overview illustrates the same area with the barriers replaced by universal design elements. Numbers on the second overview refer to detailed discussions of the feature in text that follows. Although the illustrations focus on single-family homes, most designs are appropriate for multi-family units as well. Following the overviews are more detailed descriptions and illustrations of the highlighted universal design features, potential benefits of each feature, alternatives, most appropriate type of remodeling project in which to include the feature, and installation suggestions. Simple, inexpensive, "do-it-yourself" changes to meet a specific individual need follow. Each section concludes with a paragraph on replacing the entire space (gut rehab) or constructing an addition, and the use of technical information in the accessibility standards to guide planning for total access.

ENTRANCES

Common Barriers at Entrances

Remodeled Entrance (when stairs remain)

Remodeled Entrance (with stairs removed)

Porch Landings

Steps/Stairs

Drop-offs

Signage

Doorbells

Intercom Call Boxes

Lighting

Package Shelves

Entrance Doors

Additional Changes to Meet Temporary or Individual Needs

Replacing or Installing Entire Entrances

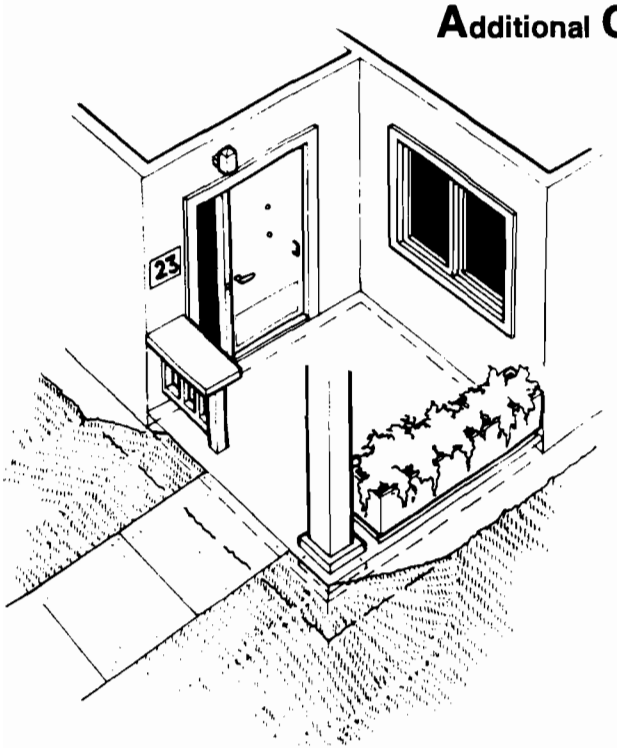

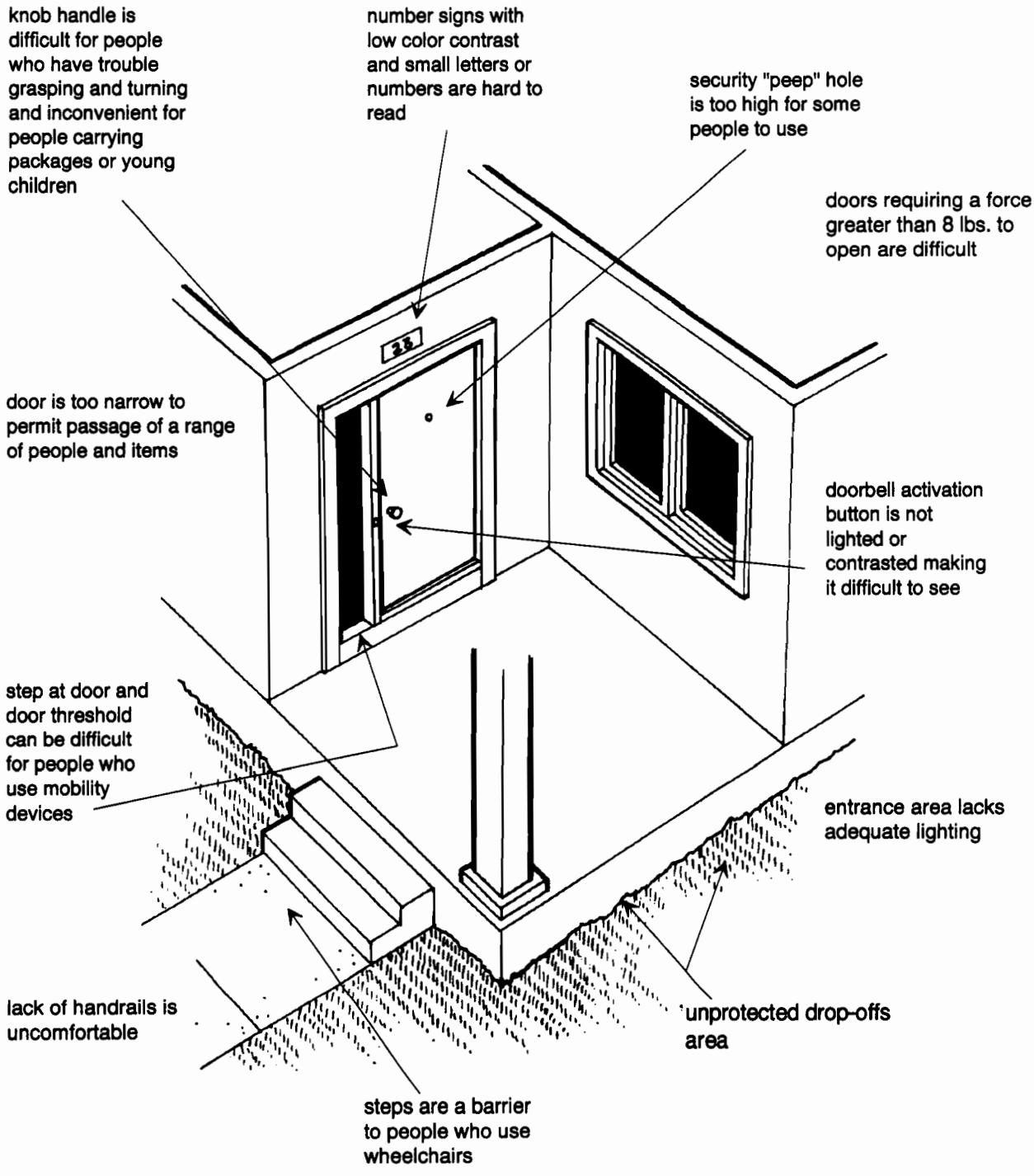

Common Barriers at Entrances

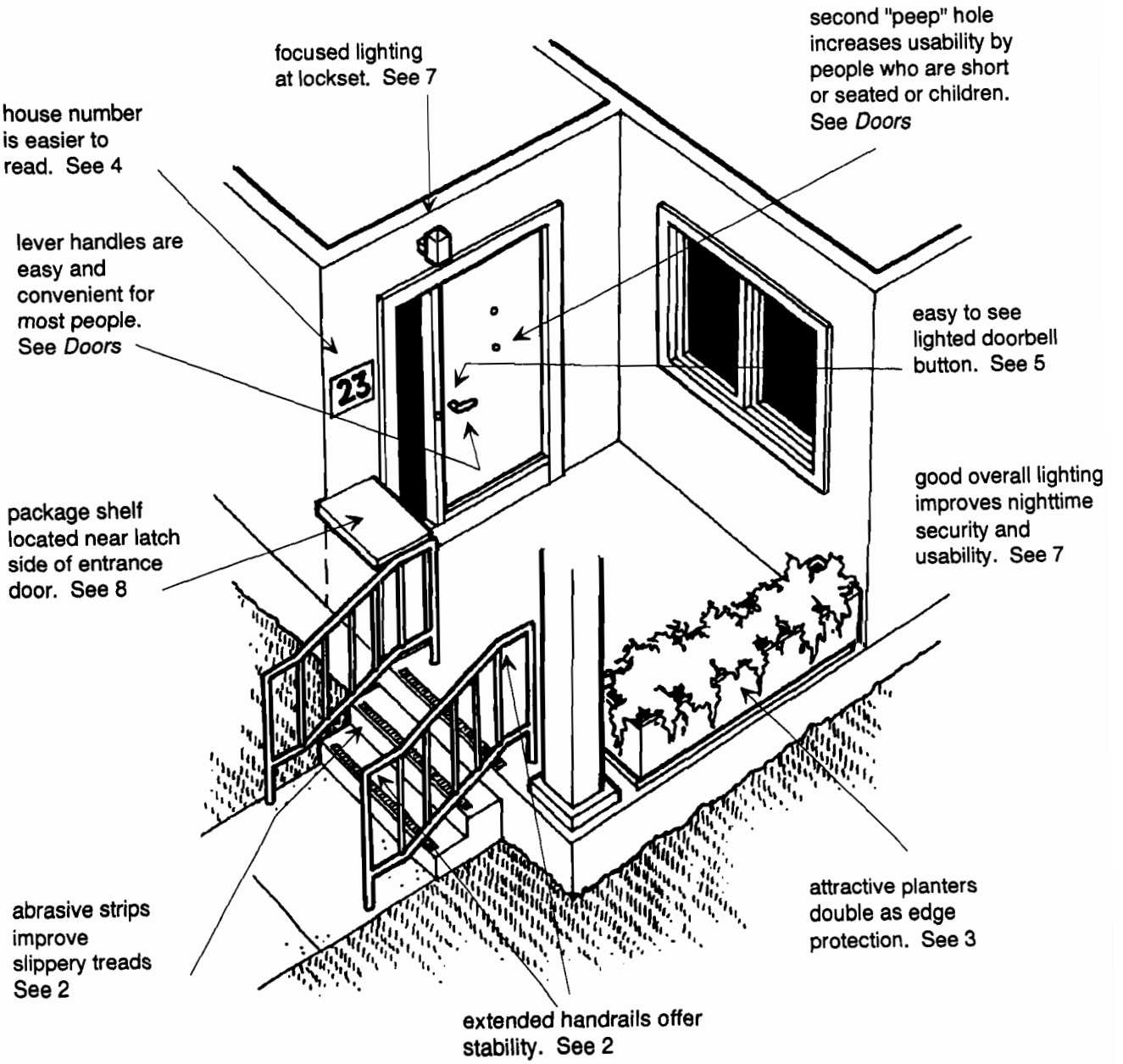

Remodeled Entrance
(when stairs remain)

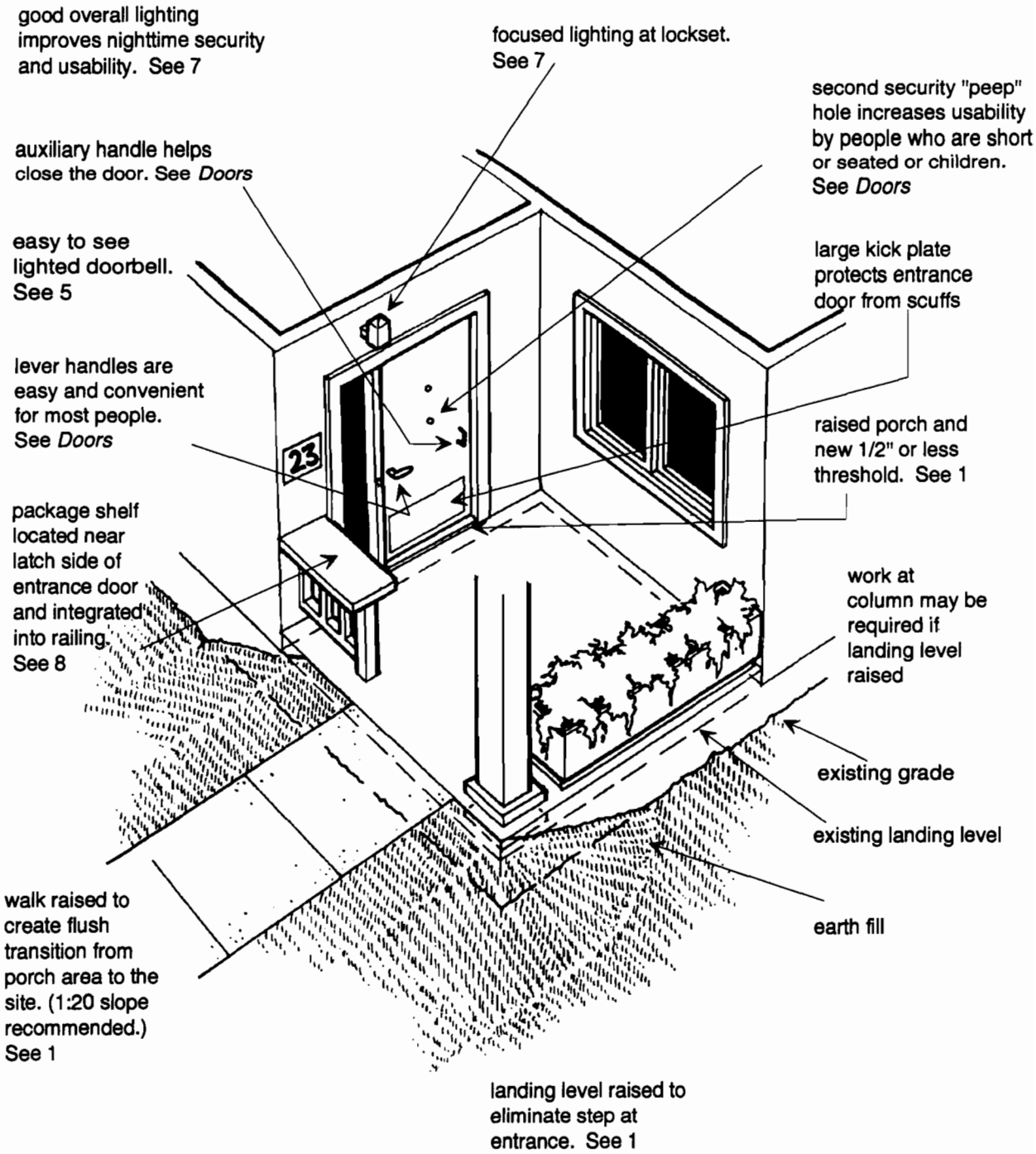

Remodeled Entrance
(with stairs removed)

Entrances

1. Porch Landing

Porch Size: Consider enlarging the porch or stoop area to at least 5 feet by 5 feet when remodeling the entry area. A porch of this size will allow a person using a walker, cane, or wheelchair room to maneuver while opening the entrance door.

Raise Porch Level: The level change between interior and exterior of the house is troublesome for people who have difficulty walking or vision impairments. When repairing or replacing the porch or stoop landing, this can be minimized by raising the exterior level to within 1/2-inch or less of the interior floor level.

When porch/stoop landings are almost level with the interior floor, there is increased risk of water infiltration at the door. Common water-proofing techniques should be practiced, including:

- ensuring positive surface slope away from the building;
- inserting continuous metal or plastic water bars in joints and under thresholds;
- adding positive interlocking weather stripping;
- raising or deleting bottom courses of siding;
- adding flashing at perimeter of floor system;
- caulking at all exposed joints; and,
- using appropriate drains and weep holes.

Canopies, roofs, and other weather protection will also help prevent leaking.

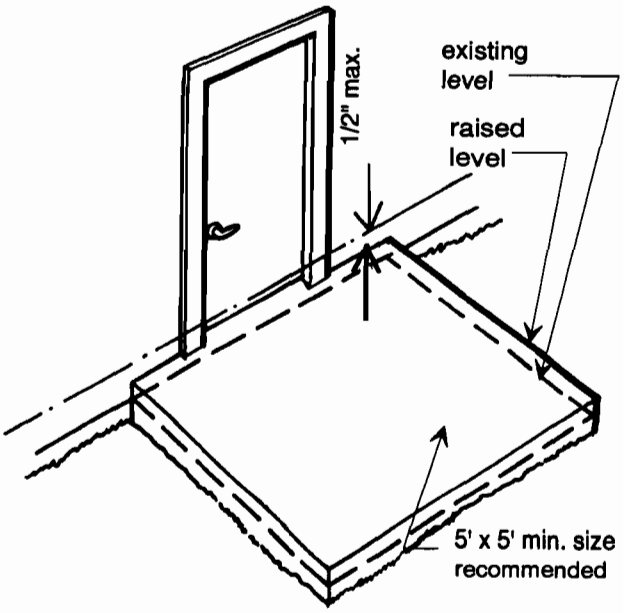

Raised Porch

Walk Level: If walks serving porches or stoops that are low to the ground are being replaced or undergoing significant repair, they can be raised on earth fill at a gradual slope to create a flush connection between walk and porch. This will create easier access for people with unsure balance and those who use canes, walkers, wheelchairs, or other mobility devices. Recommended walk slope is 1:20. Handrails are helpful on slopes between 1:20 and 1:12 (the absolute maximum).

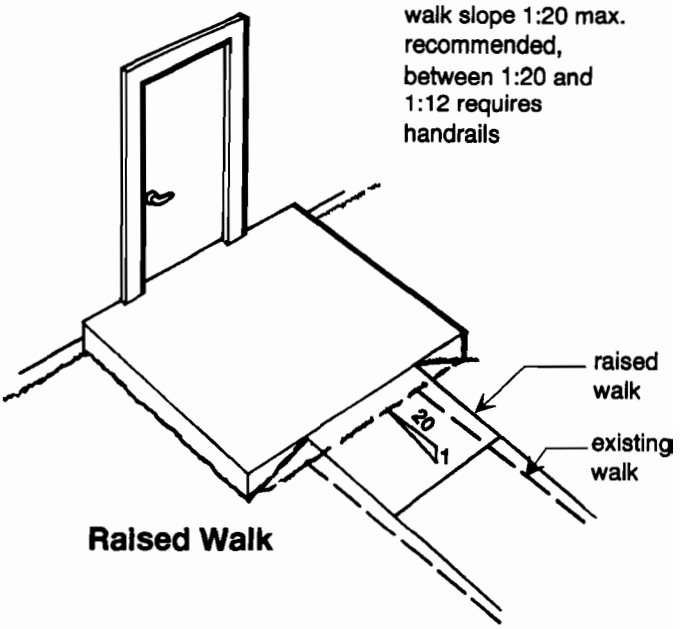

Raised Walk

2. Steps/Stairs

Step/Stair Repair and Replacement: When up-dating or replacing other elements of the home entrance, pay particular attention to the steps. Many injuries in the home involve steps, particularly among children and older adults. Weather conditions also contribute to falls on exterior steps and require consideration.

Consider using steps with curved or sloped nosings and no sharp edges. Risers should be equally spaced to enable the body's natural rhythm to continue throughout the climb or descent. Treads and risers should be of consistent size for maximum safety and ease of use. A non-slip surface should be provided. See *Interior Stairs*.

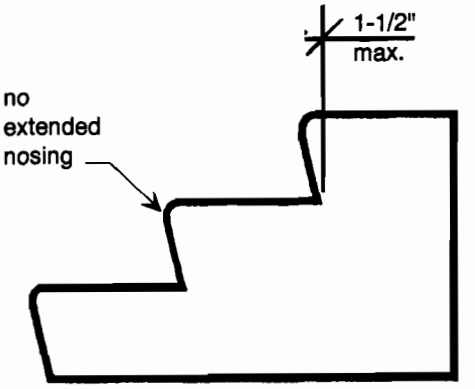

Tread and Nosing Design

Stair Railing Replacement: When replacing stair handrails, install sturdy new railings. Consider including rail extensions which offer stability and assistance for people with balance or mobility limitations. For details on railing design, see *Interior Stairs*.

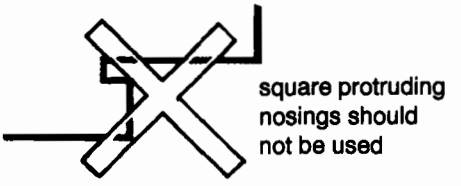

3. Drop-offs

Edge Protection: Unprotected drop-offs at porches, stoops, or landings may be a problem for people who have difficulty controlling or directing their travel, or vision impairments. Consider installing a railing, bench, planter, or curb to define the edge and provide an appropriate visual cue.

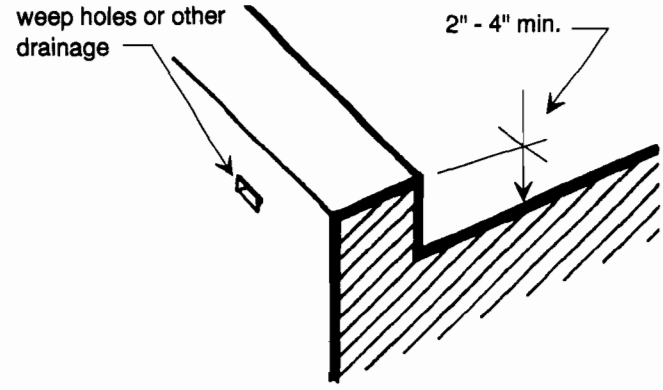

Curb Edge Protection

4. Signage Replacement

Type: Replace house numbers and other signs which are difficult to see from a distance with large, high contrast letters or numbers in a simple type face. Easily-read signs assist not only guests of the home but also emergency services.

Examples of acceptable type faces include such as:

"The Smith's"
(Helvetica)

"The Smith's"
(ITC Avant Garde Gothic Demi)

Unacceptable type faces may include:

"The Smith's"
(Times Roman Italic)

'The Smith's"
(New Century Schoolbook Italic)

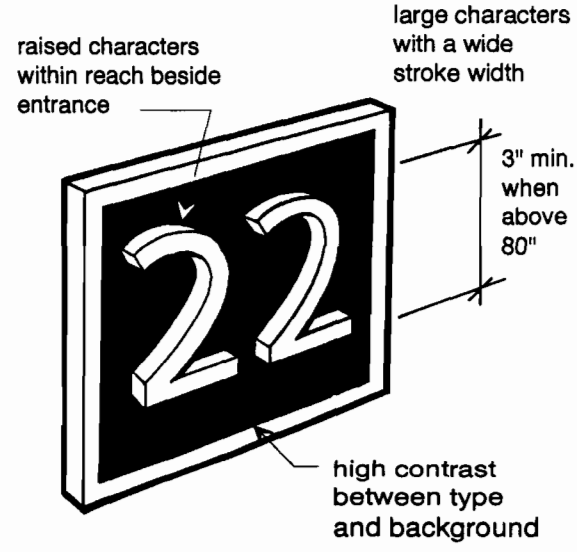

Easy-to-Read Signage

Mounting Height and Location: In multifamily buildings with interior entrances to individual units, mount unit numbers or letters 60 inches above the floor on the latch side of the entrance door. If numbers are within reach, consider using a raised type to enable "tactile" reading by people with vision impairments.

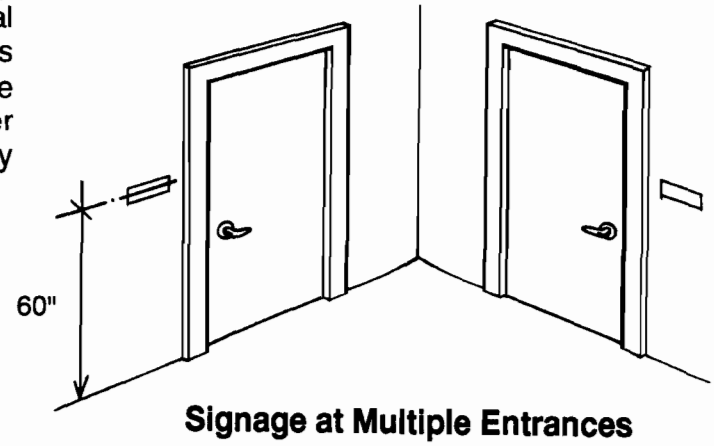

Signage at Multiple Entrances

5. Doorbell Replacement

Activation Button: When replacing doorbells, you may use new models that have either a lighted or at minimum a high contrast activation button to assist people with vision impairments. Locate the doorbell 36 inches to 48 inches above the floor for most convenient use.

6. Intercom Call Box Replacement

Mounting Height: When replacing, adding, or moving an intercom call box, try to install so the activation button is located 48 inches maximum above the floor. If multiple units are wired into one box, you may locate as many activation buttons as feasible at 48 inches or below, within easy reach by children, smaller adults, or seated individuals.

Activation Button: The new intercom call box should have either a lighted or high contrast call button for easier use by people with vision impairments.

Type/Numerals: Select a model with high contrast numbers or letters in simple type for easy identification. Raised numbers will allow people with vision impairments to "read" by touch.

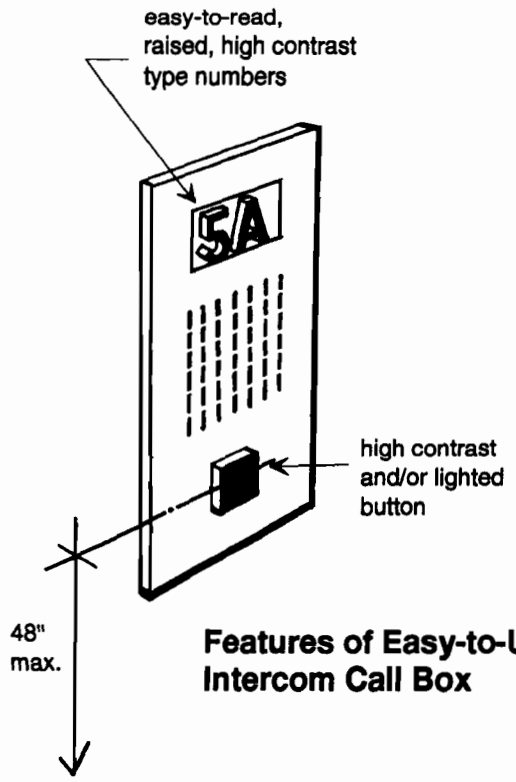

Features of Easy-to-Use Intercom Call Box

7. Lighting

General: Changes in vision occur gradually as people age. Typically, older eyes require almost 3 times as much light as younger eyes. Lighting in entrances, as well as in other areas of the home, may be inadequate for some users.

When replacing light fixtures or doing other electrical work in the entrance area, consider improving both the overall lighting level and the focused lighting.

Particularly focus new light fixtures on the lockset, house numbers, and steps.

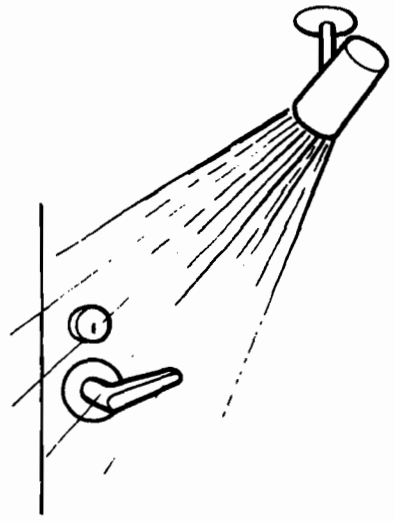

Focused Lighting at Lockset

8. Package Shelves

Location: When repairing or replacing entrance walls, railing, or siding, consider installing a package shelf. A shelf located near an entrance door provides a place to put packages and other items while unlocking and opening the door. This is especially helpful for people who must use both hands to manipulate the lock and open the door and a convenience for everyone.

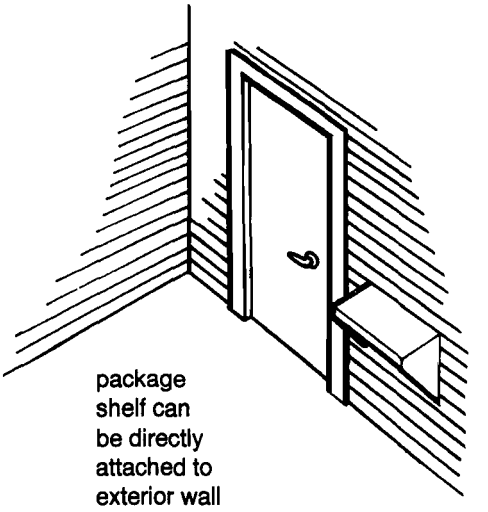

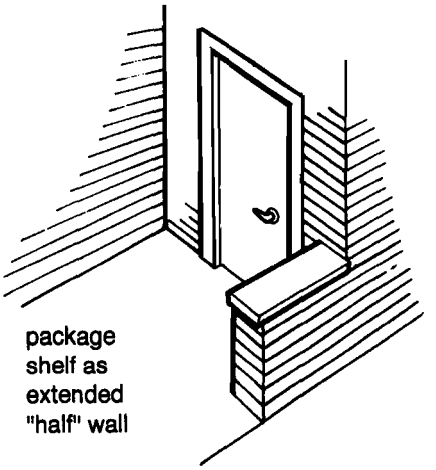

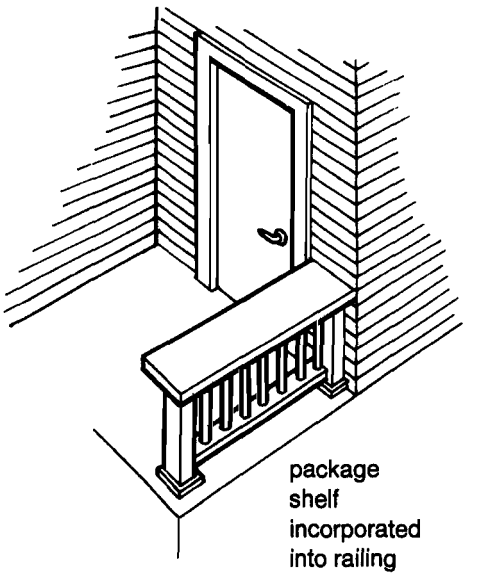

9. Entrance Doors

General: The design of the entrance door as well as the approach to the door determines those people who will and will not be able to enter the home. A doorway that provides a clear opening of less than 32 inches, for example, denies entry to most people who use a wheelchair and may be difficult to maneuver for people using canes and walkers. A narrow doorway may also impede the passage of large furniture and other household items into and out of the home.

An opportune time to correct this potential problem is when remodeling the entrance or replacing the entrance door. See *Interior Doors* for details.

Additional Changes to Meet Temporary or Individual Needs

- **Install temporary ramp.**
- **Install temporary platform lift.**
- **Install abrasive strips** on slippery stair treads.
- **Install wood bevels** under extended nosings on stair treads.
- **Install awning** for weather protection.
- **Install temporary wood platform** to raise entrance landing to within 1/2-inch or less of interior floor level.
- **Install a knocker light** on entrance door that flashes when activated by vibrations caused by knocking.
- **Connect doorbell to interior light** that will flash on and off when doorbell is activated.
- **Install wireless doorbell.**
- **Install intercom system with video display.**

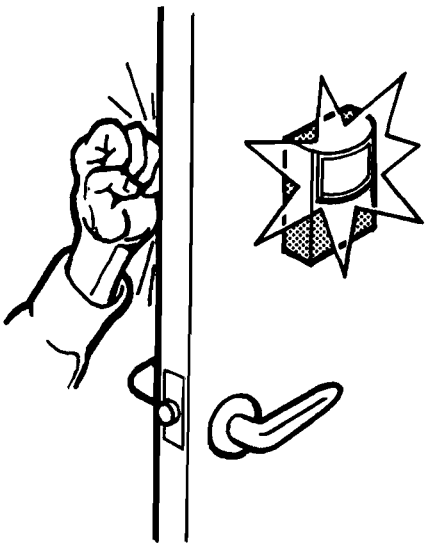

Knocker Light

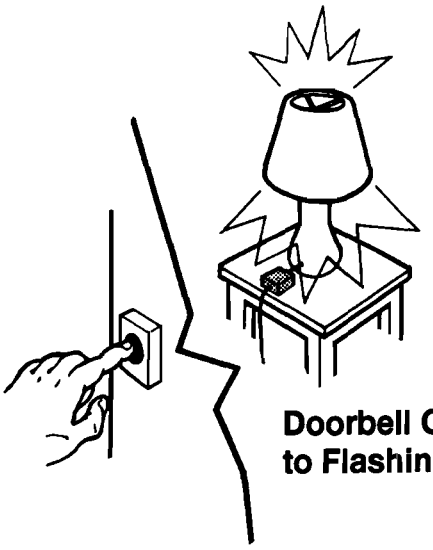

Doorbell Connected to Flashing Light

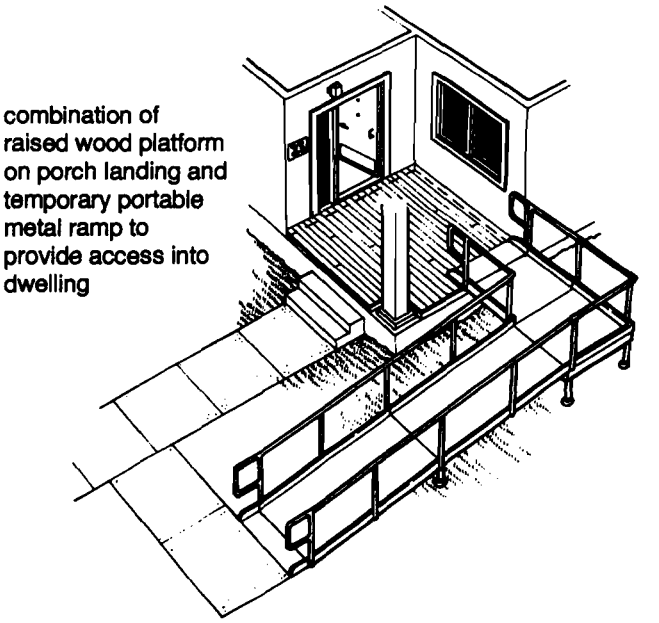

Combination of Raised Platform and Temporary Ramp

Replacing or Installing Entire Entrances

Providing an accessible entrance is pivotal to creating a dwelling that is universally usable. The most critical issues such as maneuvering space, clear door opening width, and the relationship of exterior grade and interior floor level may be difficult or impractical to address during typical home remodeling or modification projects. The best time to address the underlying structural and design problems that may prevent access is when undertaking a complete renovation of the entrance or adding a new one.

The major accessibility standards and guidelines listed in *Appendix A* offer guidance on providing an accessible entrance. The standards, combined with publications listed in *Appendix B*, will help you evaluate existing conditions, set performance criteria, and establish design goals to create entrances that are accessible to more people.

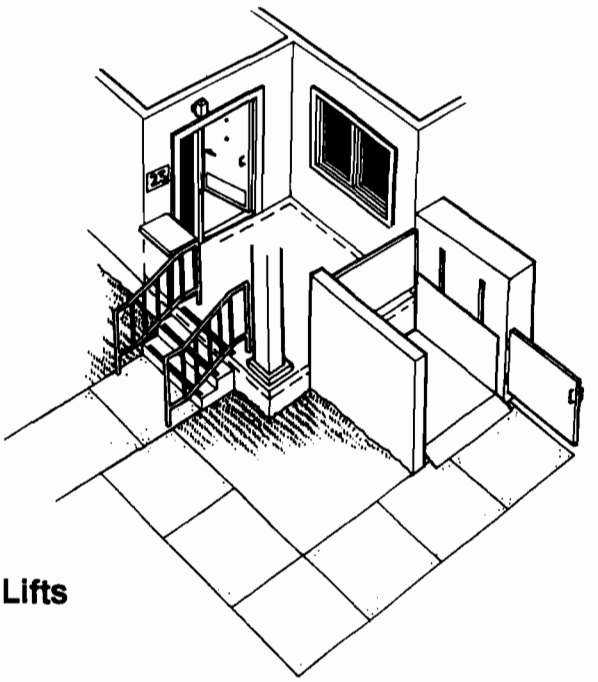

Lifts

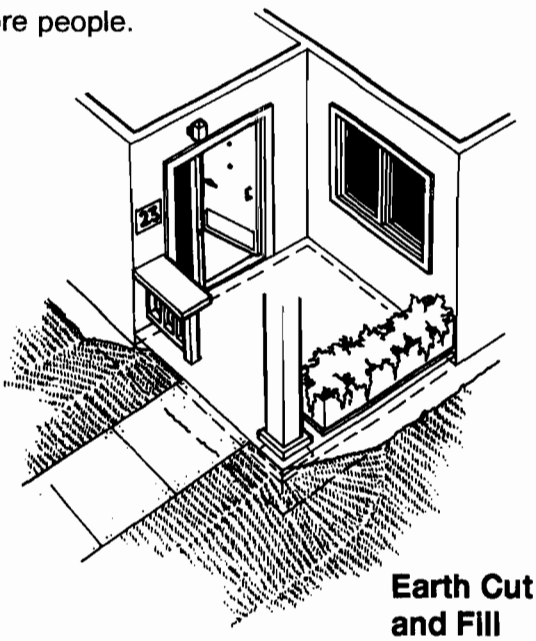

Earth Cut and Fill

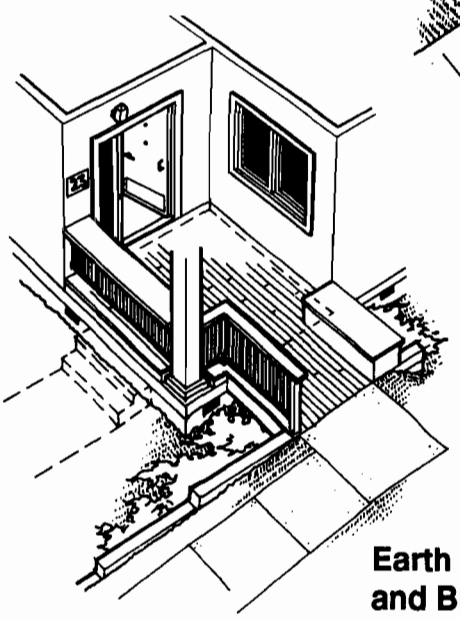

Earth Berm and Bridges

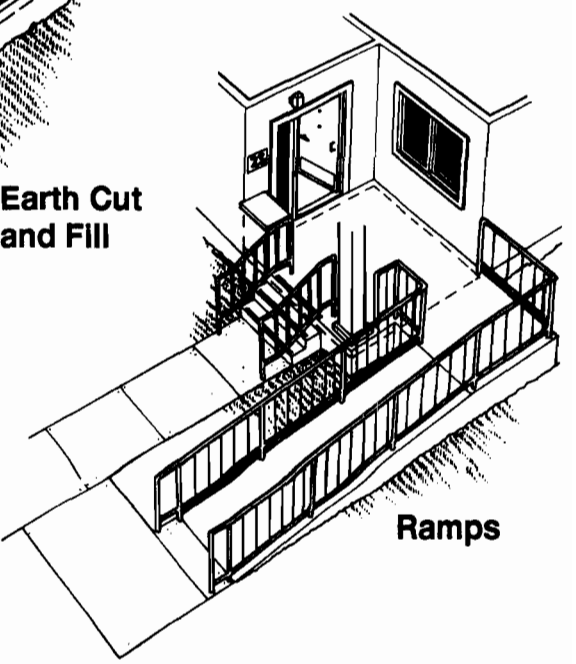

Ramps

DOORS

Common Barriers at Doors

Remodeled Door

Exterior Swinging Doors

Exterior Sliding Doors

Interior Swinging Doors

Interior Folding Doors

Interior Bi-Passing Doors

Interior Pocket Doors

Additional Modifications to Meet Temporary or Individual Needs

Accessible Doors

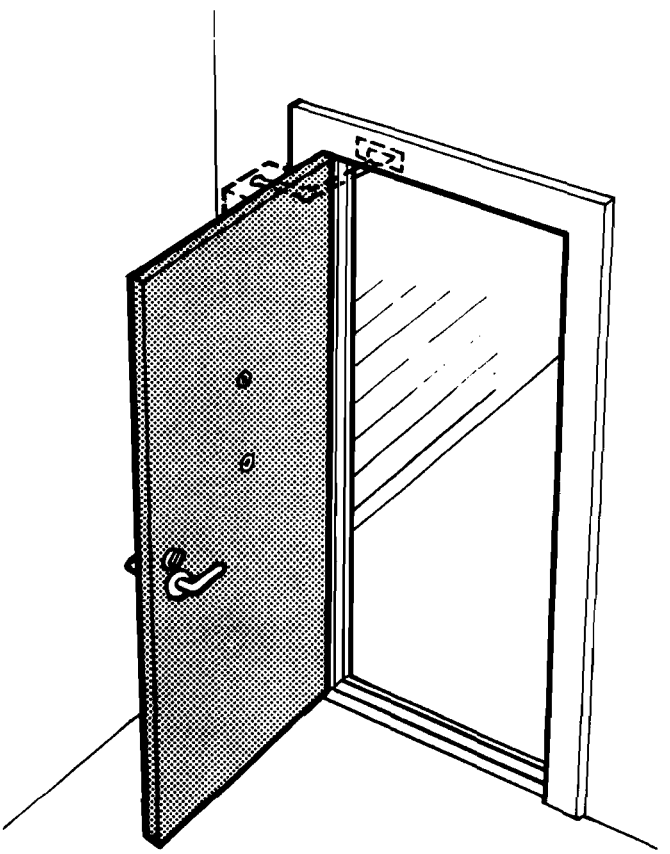

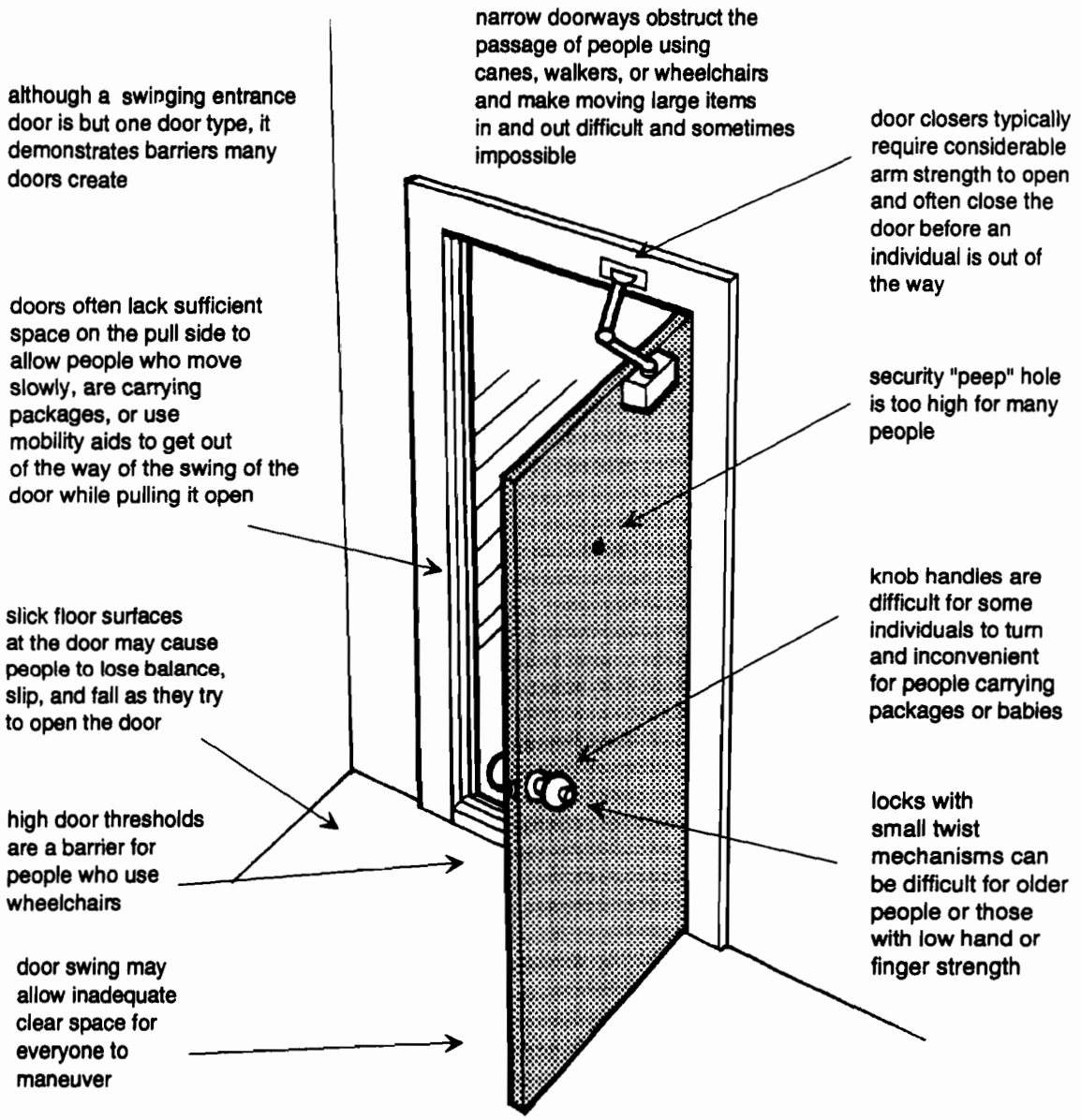

Common Barriers at Doors

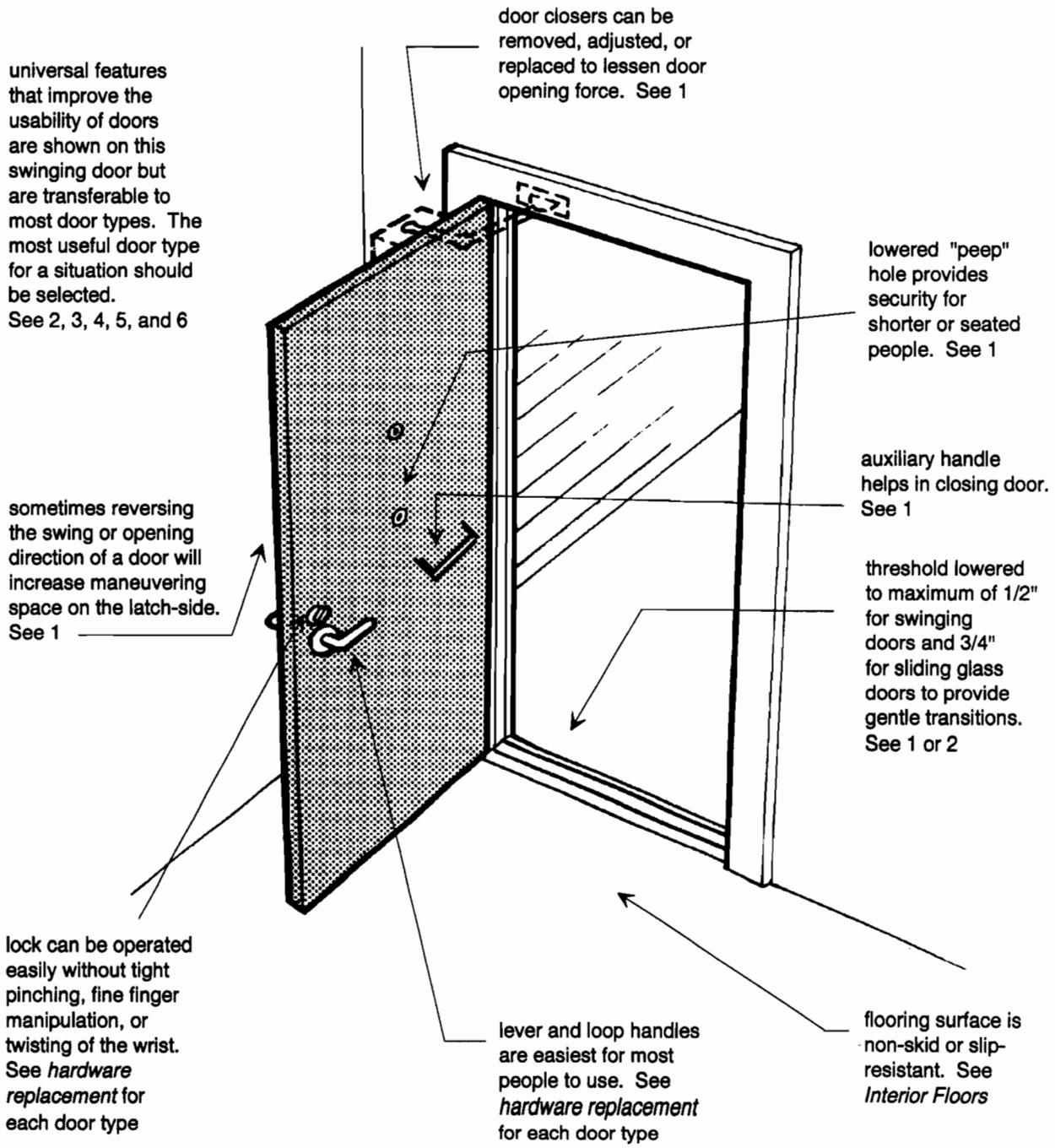

Remodeled Door

Doors

1. Exterior Swinging Doors

Hardware Replacement: Exterior doors, for reasons of emergency egress as well as comfort, should be operable by all residents. Some people with physical limitations, including older people, often lack the strength, agile fingers, grip, or dexterity required to unlock and enter their homes.

When replacing or installing traditional door handles and lock sets that require grasping, pinching, or twisting such as knobs and dead bolts consider using loop or lever handles. A 5-inch handle provides enough leverage to open the door when operated by an elbow or fist. Locks should be operable with one hand. A second handle can be added to a swinging door to enable the user to pull the door closed after passing through.

Hinge Replacement: Consider installing a swing-away hinge to increase the clear opening of a narrow doorway. Swing-away hinges allow a door leaf to swing completely clear of the opening. Plan to provide as close to a 32-inch clear opening as is possible without major structural changes. Any increase in door opening is helpful. Sometimes reversing the swing or opening direction of a door will increase maneuvering space on the latch-side of the door, making it easier for people using mobility devices to enter independently.

Threshold Replacement: High door thresholds are a barrier for toddlers, elderly people, and those who walk with difficulty, as well as for people who use wheelchairs. Although a flush transition is most desirable, thresholds with maximum heights of 1/2-inch can be managed by most people and still perform their function on swinging doors.

Lever Handle

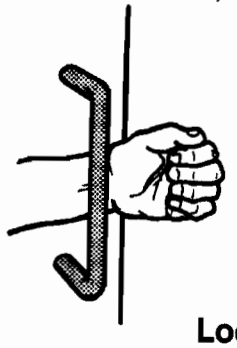

lever and large loop handles are easiest to use with one hand

Loop Handle

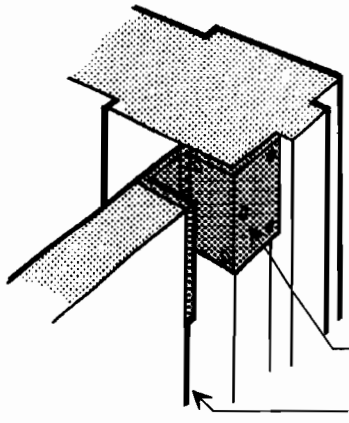

Swing-Away Hinge

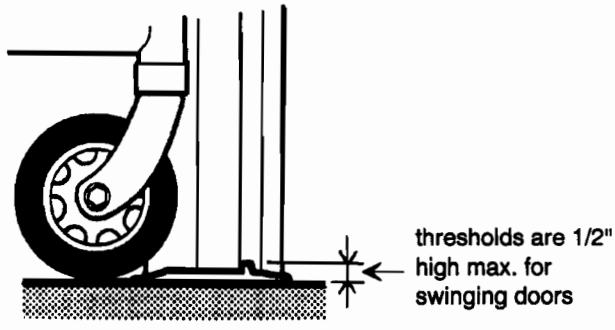

Accessible Threshold

Peep Holes: One security peep hole in the entrance door is sometimes insufficient to accommodate everyone in a typical household. Consider adding a second peep hole at a lower height to allow children, shorter people, and those who are seated the opportunity to see out as well as a standing adult.

Door Closer Adjustment/Replacement: Door closers can be adjusted or replaced so a minimum amount of force is needed for opening. People with weak hand, arm, or leg strength as well as those who have difficulty maintaining balance will be able to open and close these doors more comfortably. A need to use less force is also convenient for a person carrying packages or maneuvering carts or strollers. The recommended level of force required to open exterior doors is 8 lbs. and to open interior doors, 5 lbs. While it may be tricky to achieve this level for exterior doors under some conditions, you may want to consult your local codes and consider reducing the force as much as practical for your area.

Double Door Replacement: It may be possible to replace equal sized double doors with doors of unequal size to achieve a 32-inch clear opening within the existing frame. A clear opening of this size will allow everyone, including people who use wheelchairs, to enter.

Reversing Door Swing: Sometimes reversing the swing or opening direction of a door will increase space on the latch side, making it easier to open for a person carrying packages or a small child and for an individual using a cane, walker, or wheelchair.

Replacing Screen Doors, Storm Doors, or Other Doors With Glass or Panels: Consider using a door with at least 12 inches of solid material at the bottom to prevent damage from walkers, footrests of wheelchairs, or sharp edges of moving dollies.

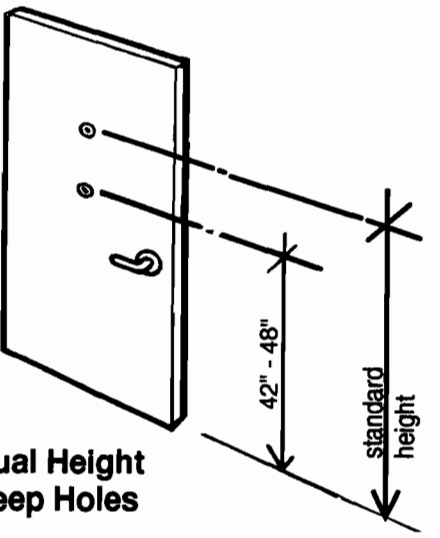

Dual Height Peep Holes

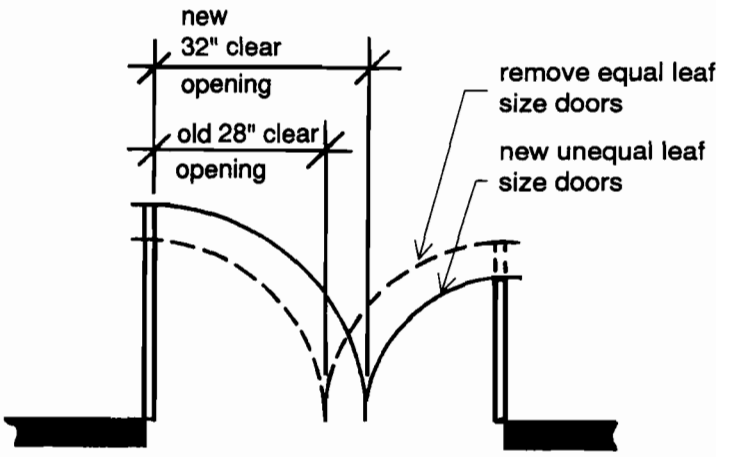

Double Door Replacement

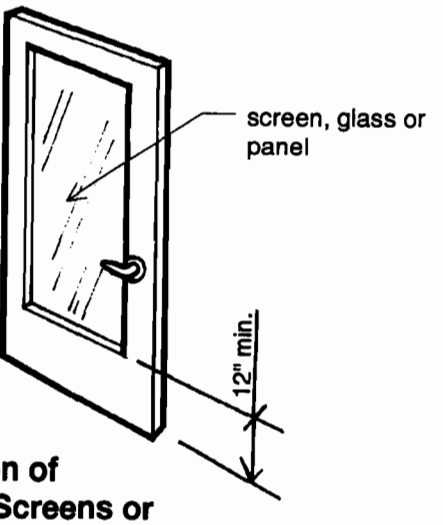

Location of Glass, Screens or Panels

2. Exterior Sliding Glass Doors

Hardware Replacement: Preferable hardware for sliding glass doors are loop or blade handles that incorporate lever locking mechanisms and remain exposed even when the door is open. These handles enable the user to open the door with only one hand. If loop handles are used, the loop should be at least large enough for an adult hand to extend partially through.

Thresholds: Some new model sliding glass doors have accessible thresholds, allowing easy, safe access in and out. Threshold should be as low as possible, with a maximum height of 3/4-inch.

Replacing With Other Door Types: To be completely accessible, a sliding glass door should allow for a clear opening of at least 32 inches. When replacing a narrow sliding glass door, consider substituting a different type door in the rough opening. For example, it may be possible to use swinging double doors of uneven sizes, or even a single swinging door and a fixed panel. One of the doors would provide a 32-inch clear opening.

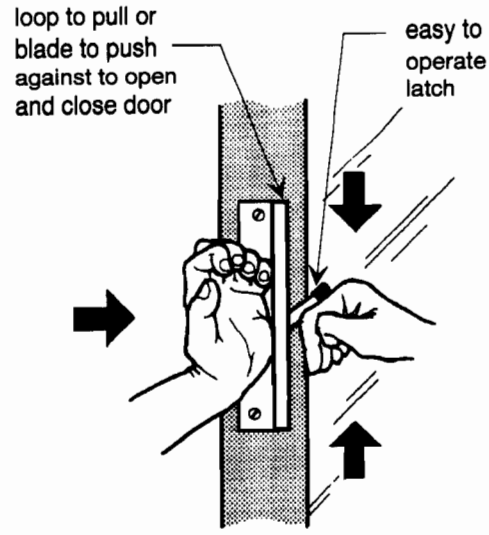

Sliding Glass Door Hardware

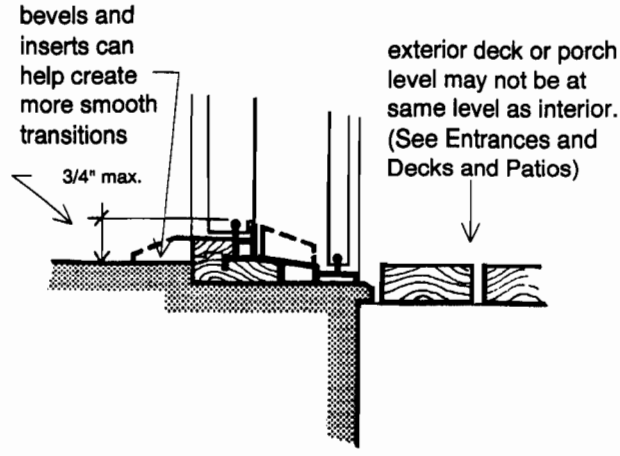

Exterior Sliding Door Threshold

3. Interior Swinging Doors

Generally, interior swinging doors and doorways can be replaced or modified to be usable by more people in the same manner as exterior swinging doors. See relevant sections in *Exterior Swinging Doors* for more details. Often it is wise to eliminate an interior door where it serves no real purpose. Doorways can remain doorless. A 32-inch clear doorway opening is more easily achieved without a door than with a door.

The direction of the door swing requires consideration. Ideally, the door should swing out of the way of other doors, furniture, and an easily accessed path through the home. Changing the door swing from into a room to out of the room may increase room space.

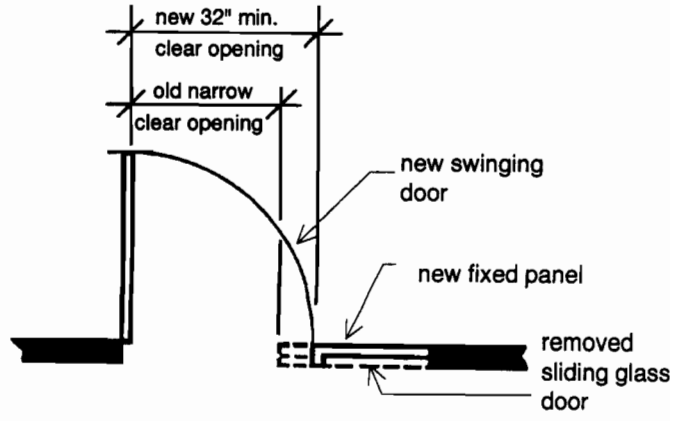

Swing Door/Fixed Panel Replacement

4. Interior Folding Doors

Hardware Replacement: Loop handles are easy for everyone to use as long as the loops are at least large enough for an adult hand to partially fit through. Approximately 1-1/2 by 3 inch "D" shaped handles for example meet the criteria and are available in all materials and colors.

Swinging Bi-Fold Hardware: Swinging bi-fold hardware can be installed on interior folding doors to eliminate the need for tracks and allow the doors to swing against the wall and out of the way. Clear opening space is increased at the closet and the door is set out of the path of travel.

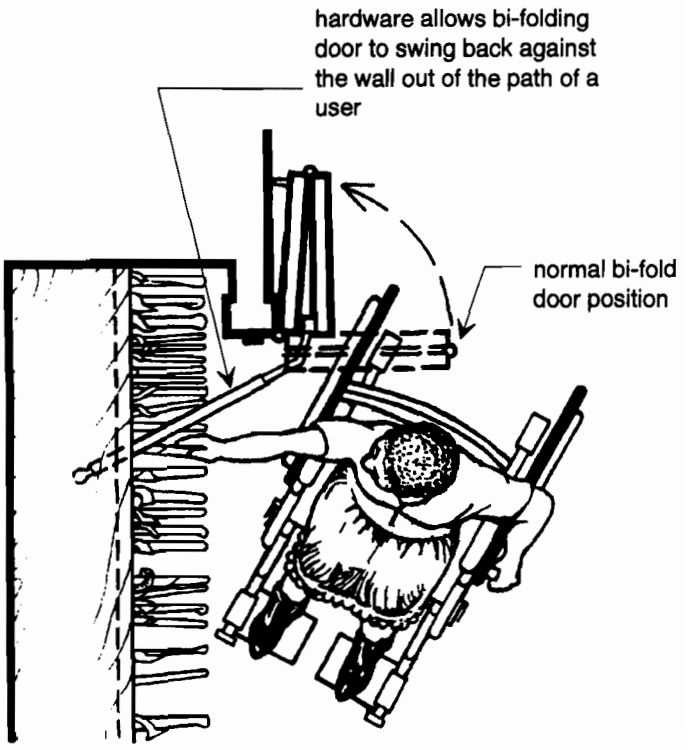

Bi-Fold Door Hardware

5. Interior Bi-Passing Doors

Handle Hardware Replacement: It is not easy to install universally usable handle hardware on bi-passing doors. The lever and loop type handles usually protrude from the surface of the door which impedes the bi-passing movement of the doors. Loop handles offer the best chance of being installed on these doors, but stops will be needed to keep the handles from striking the opposing door. However, stops and handles will reduce the intended clear opening for the door and this can affect usability. In instances where security or privacy are not issues, consider installing doors that have large slot handles cut completely through the door itself. The size of the slot must be at least large enough for an adult hand to partially fit through as in a loop handle.

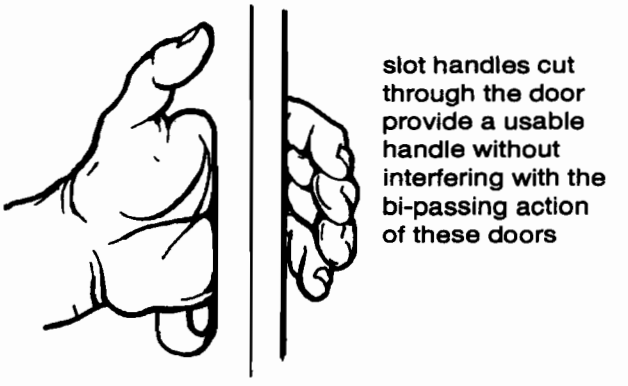

Slot Handles

Replacing With Other Door Types:
Bi-passing doors with loop handles are not always practical and can significantly reduce the clear door opening. They can be replaced with swinging or folding doors that allow larger clear openings and are generally easier to modify for individual needs.

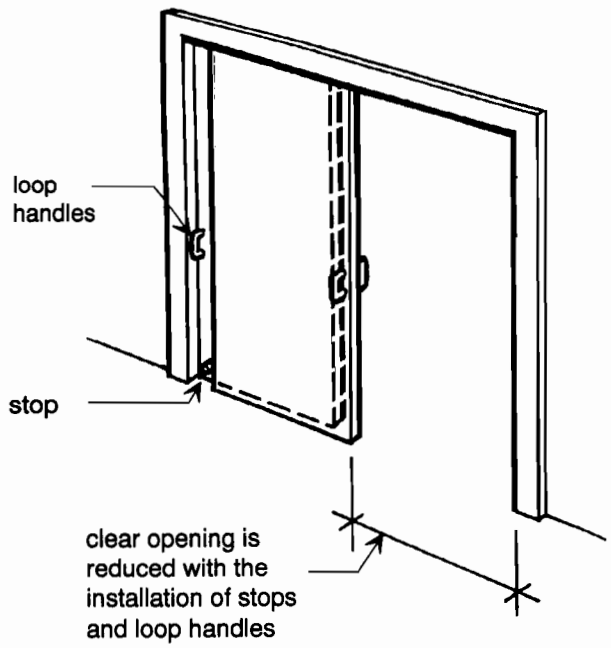

Bi-Passing Doors with Loop Handles

6. Interior Pocket Doors

Handle Hardware Replacement: It is not easy to choose universally usable handle hardware on pocket doors. The best selection is generally the loop handle. A stop will be needed to keep the handle from striking the jam. The clear opening of the door will be reduced because of the extra space required to install the stop and the handle and this can affect usability.

Replacing With Other Door Types:
Sometimes the use of loop or lever hardware on a pocket door may actually reduce the opening of the doorway. In these cases, consider replacing pocket doors with swinging or folding doors that allow wider openings.

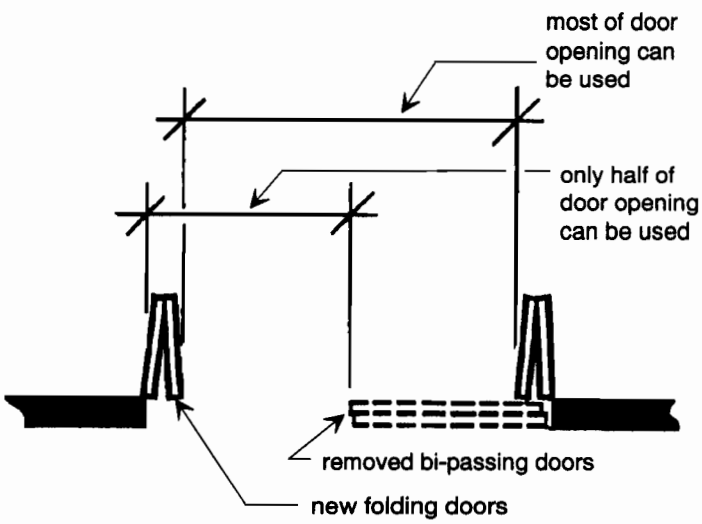

Folding Door Replacement

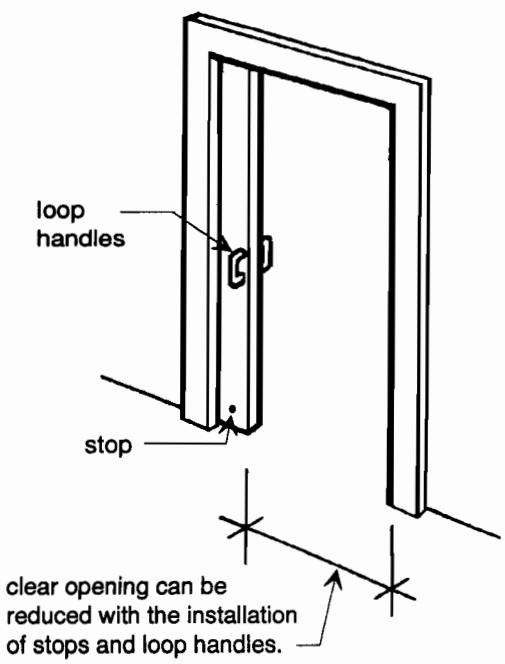

Pocket Door

Additional Modifications to Meet Temporary or Individual Needs

- **Install power door operators.**
- **Install swing-away hinges** to increase clear opening of a door by approximately 2 inches.
- **Reverse swing** of a hinged door to improve maneuvering space to the pull side.
- **Adjust door closer** to reduce opening force.
- **Install add-on lever handles.**
- **Install auxiliary loop handles.**
- **Install bevels or short ramps** at high thresholds or at small step-ups.
- **Use inserts in sliding glass door thresholds** to create a smooth transition.
- **Install accessible threshold.**
- **Install lowered or extra wide angle peep hole** on entrance door.

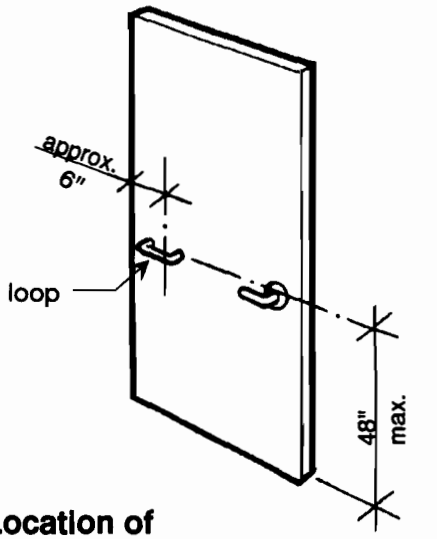

Location of Auxiliary Loop Handle

Accessible Doors

During complete home renovation or addition work, consider including fully accessible doors. Features to think about include hardware, clear width, floor space, location, and path or accessible route.

The accessibility standards listed in *Appendix A* offer guidance for providing accessible doors. *Appendix B* lists additional publications that include assistance for designing and installing doors that can be used by everyone.

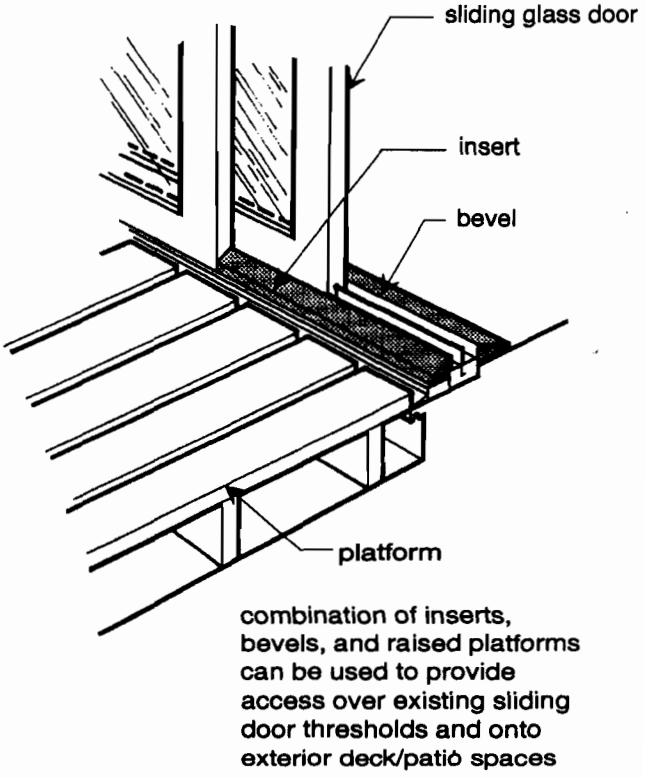

Accessibility Improvements

KITCHENS

Common Barriers in Kitchens

Remodeled Kitchen

Sinks

Ranges

Cook Tops

Ventilation Hoods

Wall and Microwave Ovens

Refrigerators

Cabinets/Storage

Flooring

Countertops

Additional Changes to Meet Temporary or Individual Needs

Replacing the Entire Kitchen

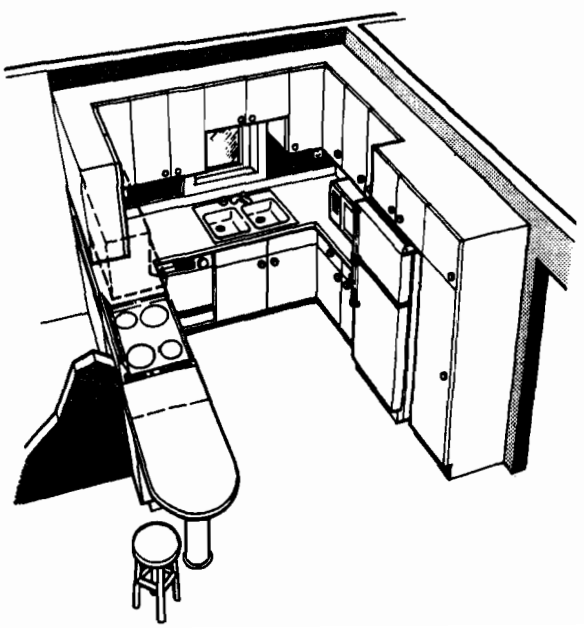

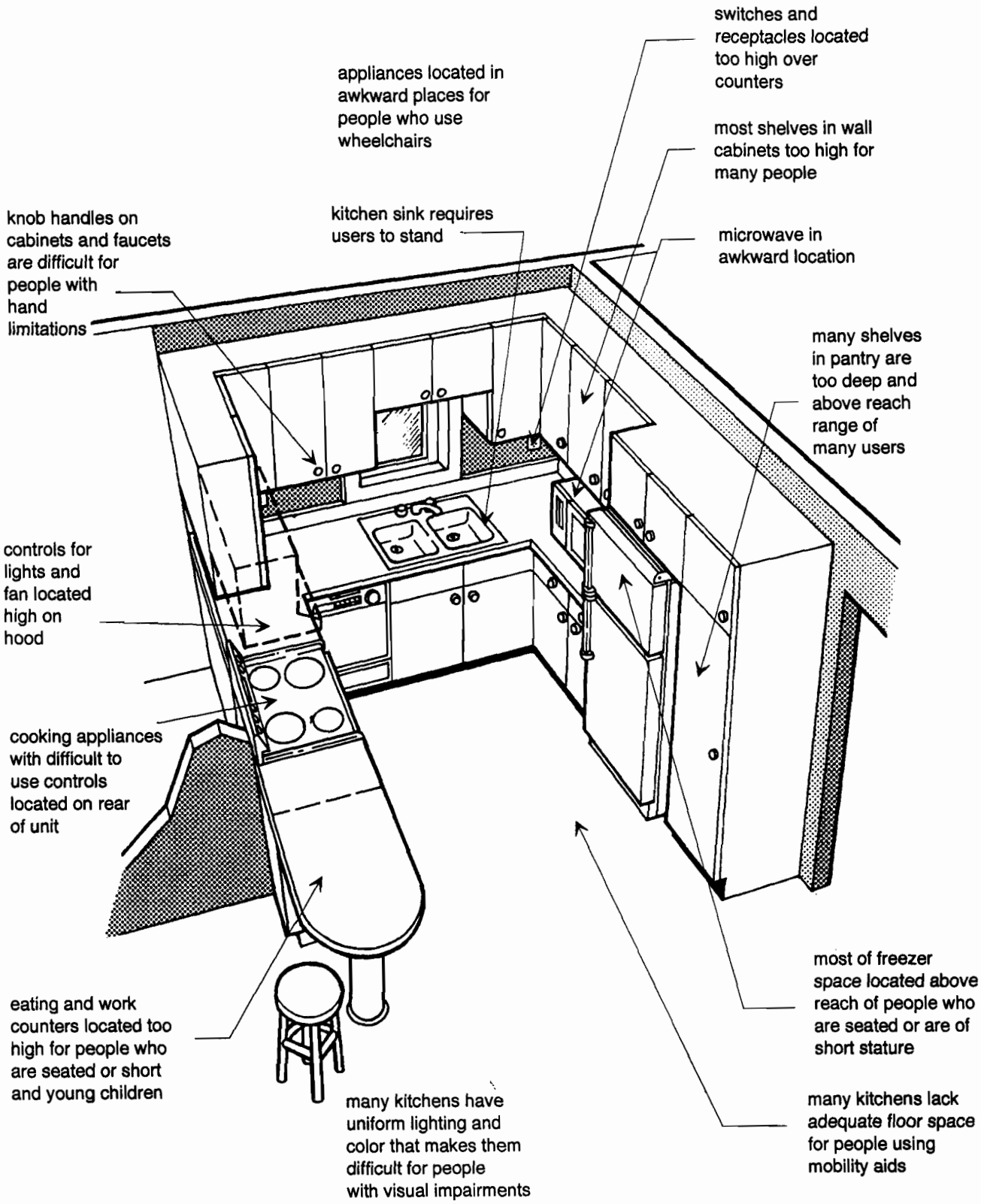

Common Barriers in Kitchens

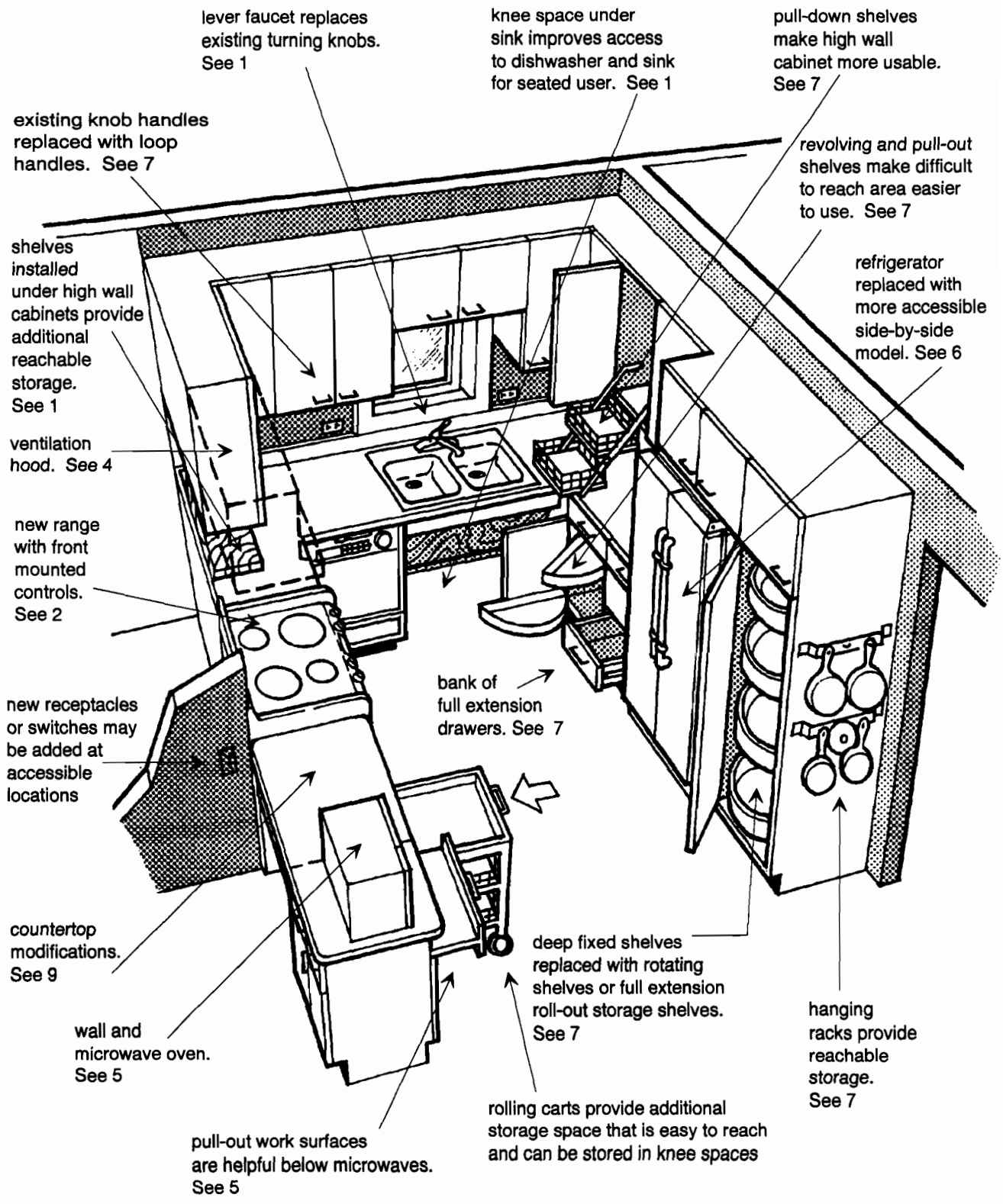

Remodeled Kitchen

Kitchens

General: Typically everyone in the household regardless of age, size, or physical ability uses the kitchen. The kitchen is the center not only for food preparation and clean-up, but often for family activities and entertaining. Several household members may share cooking responsibilities. A growing number of elderly are living independently and performing kitchen tasks.

When remodeling the kitchen or replacing appliances it may make sense to include features to accommodate all household members and all activities. For example, different height counters are convenient for cooks of different heights. Comfortably accessed storage is appreciated by everyone, including people with reaching, stooping, kneeling, and/or lifting limitations. The opportunity to sit while performing tasks is important to those who cannot stand more than a few minutes.

The following features address these issues.

1. Sinks

Faucet Handles: When replacing existing faucet handles, use lever or asymmetrical models that require no gripping or twisting by individuals with little finger or hand strength or dexterity. Single lever faucets are easily manipulated by an open palm or fist, and usable by most people. If possible, select a model with a high temperature stop to prevent accidental scalding.

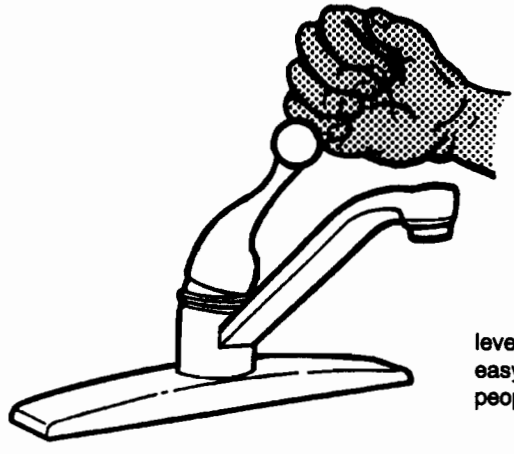

lever handles are easy for most people to use

Sink Replacement: When replacing a sink, it may be wiser and more economical to select a model with a shallow basin and the drain located at the rear off the bowl. The shallow basin is easier for people with limited reach, shorter people, and seated individuals to use.

The rear drain location will allow placement of the drain pipe far enough back to permit installation of a knee space now or at a later date if necessary. The sink cabinet can be removed to allow an individual to use the sink while seated, a necessity for those with limited leg strength or endurance.

Drain Pipe Repair and Replacement: When replacing or repairing a drain pipe, consider adding a "tub bend" to move the pipes and trap to the rear out of potential knee space. A "tub bend" will also allow for knee space beneath a sink model without a rear drain.

Countertop: If the sink and countertop are being replaced, consider locating the sink close to the front edge of the new countertop. This allows people who are shorter or seated to more easily reach the faucet controls and items in the sink basin.

Sink Cabinet: If the base cabinet beneath the sink must be replaced or significantly repaired, consider fabricating a removable model. This will allow the user the option to remove the cabinet to provide knee space for sitting at the sink or to increase wheelchair maneuvering space in the kitchen. At a later date the cabinet could be reinstalled.

If existing sink piping is not set at or near the rear wall beneath the sink as discussed above, it must be covered to prevent damage or injury to the knees of a seated person. Floor, sides of adjacent cabinets, and wall under and behind removable cabinets will require finishing.

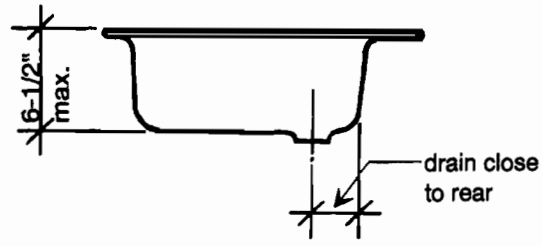

Design of Universally Usable Sink Basin

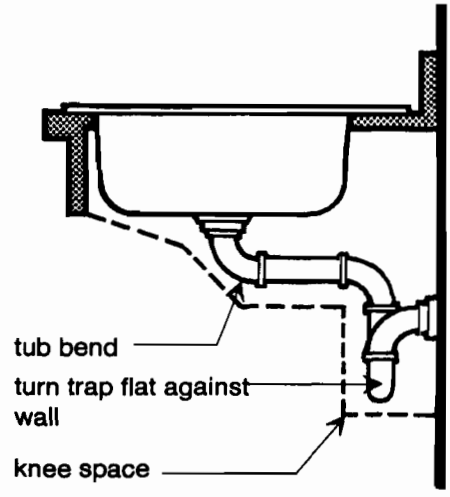

Drain Pipe Clearance for Future Knee Space

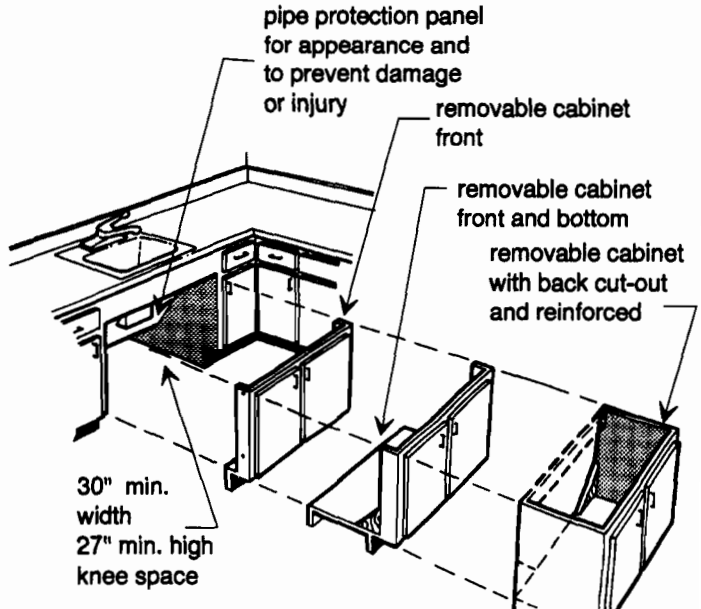

Removable Cabinet Options

2. Range Replacement

Front-Mounted Controls: New ranges are available with easy-to-use front-mounted controls. Front-mounted controls are within reach of more people, and eliminate the need for reaching across burners. A frequent cause of home fires among older people is ignition of loose sleeves while reaching for the controls. However, since many parents prefer controls that are out of reach of small children, this suggestion is not always appropriate.

Self-Cleaning Models: A replacement range with self-cleaning features is a convenience for everyone, especially those who have difficulty reaching to the rear of the oven or lack arm strength.

Base Cabinets Beside Ranges: If the base cabinet beside the range must be replaced or significantly repaired, consider making it removable to provide knee space for an individual who needs or prefers to sit while using the oven or cook top. The knee space will improve access to the inside of the oven and cook top burners for people who are seated. The cabinet can be reinstalled in the future. Floor and wall behind and under the removable cabinet will require finishing.

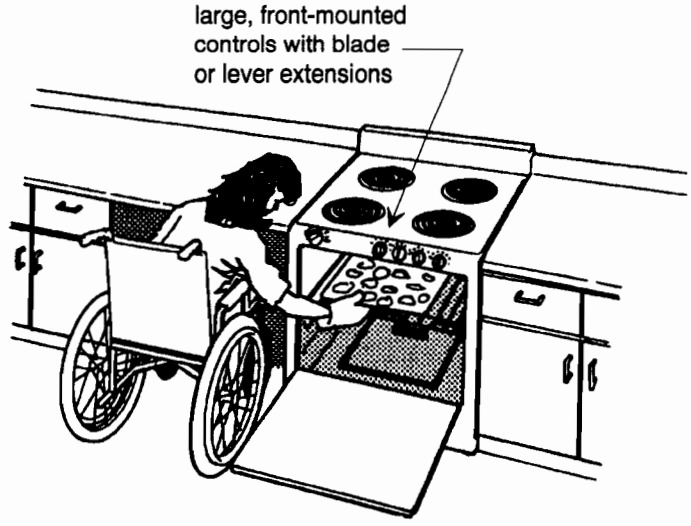

Knee Space Beside Range

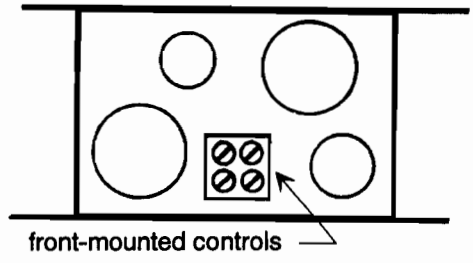

Staggered Burners

3. Cook Top Replacement

Front-Mounted Controls: New cook tops with front-mounted controls, like ranges, are available and may be preferred.

Staggered Burners: Consider cook top models with staggered burners that eliminate reaching across one burner to use another.

Flush Tops: For most households, cook tops with flush rather than raised burners and top surfaces flush with adjacent counters can be beneficial. Heavy pots and skillets can be slid instead of lifted from the burners. However, although a level cook top is helpful for people with limited hand or arm strength or dexterity, it should not be selected for a person with a visual impairment.

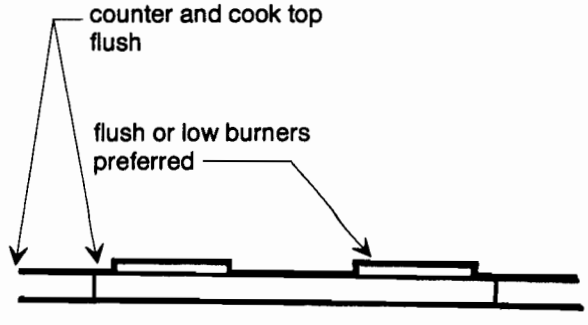

Flush Cook Top

Base Cabinets Beneath Cook Tops: If the base cabinet beneath the cook top must be replaced or significantly repaired, consider making it removable to allow for use by a seated individual.

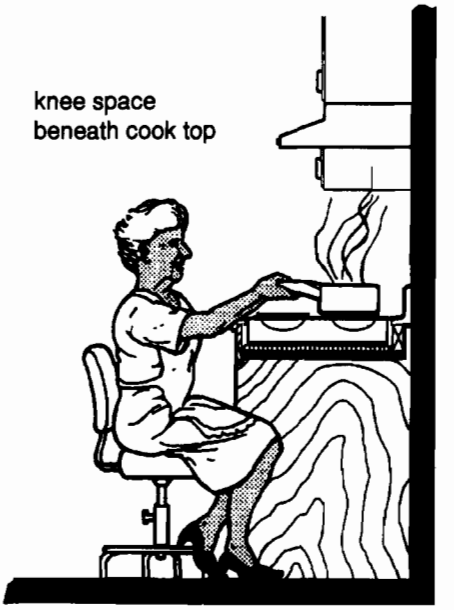

Cook Top With Knee Space

4. Ventilation Hoods

Controls: Controls for the ventilation hood for a range and cook top should be easy to operate and located on the edge of the hood itself within reach of most people.

Auxiliary Controls: When the range hood is being replaced or repaired or other electrical work is underway in the kitchen, consider installing auxiliary controls at a lower location at the counter back splash or fascia within reach of more people.

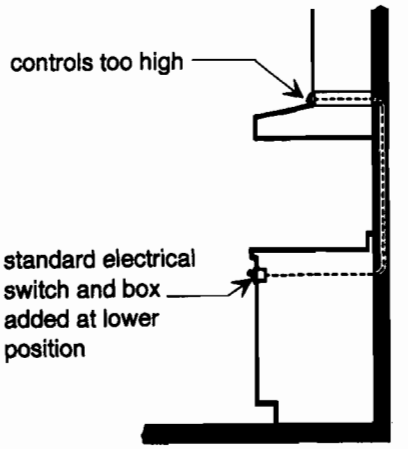

Auxiliary Controls

5. Wall and Microwave Ovens

Self-Cleaning Oven Models: Consider using new wall ovens that are self cleaning. As well as being a convenience, these models will enable people who have difficulty reaching or lack arm strength to maintain the appliance.

Base Cabinets Beneath Wall and Microwave Ovens: If the base cabinet beneath wall and microwave ovens that have side-swinging doors must be replaced or significantly repaired, consider installing a pull-out shelf. The shelf would provide extra counter space when needed and would be convenient for use by a seated person. When wider than the oven, the pull-out shelf is an excellent surface from which to safely move hot dishes to the countertop.

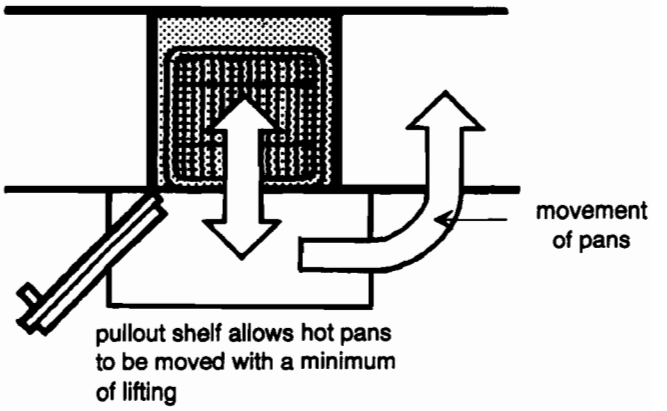

Pull-Out Shelf

Base Cabinets Beside Wall Ovens: If the base cabinet beside a wall oven must be replaced or significantly repaired, consider making it removable to provide knee space for a seated person. When sitting with knees under the counter, the individual will be able to reach further inside the oven than otherwise possible. The cabinet could be reinstalled as desired.

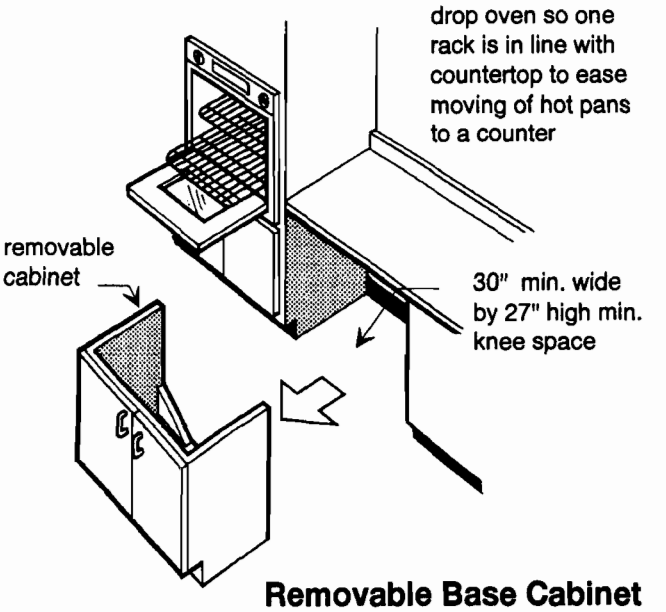

Removable Base Cabinet Beside Oven

6. Refrigerator Replacement

Side-by-Side Models: Consider replacing an old refrigerator with a side-by-side model, the easiest for most people to use. Models with the freezer at the top or bottom of the fresh food section are difficult for people with limited reaching, stooping, or bending ability. Side-by-side refrigerators usually have sufficient space reachable by all.

Over/Under Models: In kitchens where space prohibits use of a side-by-side refrigerator select a model with bottom of the freezer located no more than 4 feet above the floor. A model with the freezer below the fresh food space may be an option except for those for whom bending and stooping is troublesome.

Ice and Water Dispensers: Consider selecting a refrigerator with a through-the-door ice and water dispenser handy for everyone but especially convenient for people with limited hand dexterity who cannot use ice trays.

Pull-Out Shelves: Select a refrigerator with pull-out shelves and trays to increase use of the rear space.

Location: If the refrigerator is being relocated, place it where the door or doors can swing back fully 180°.

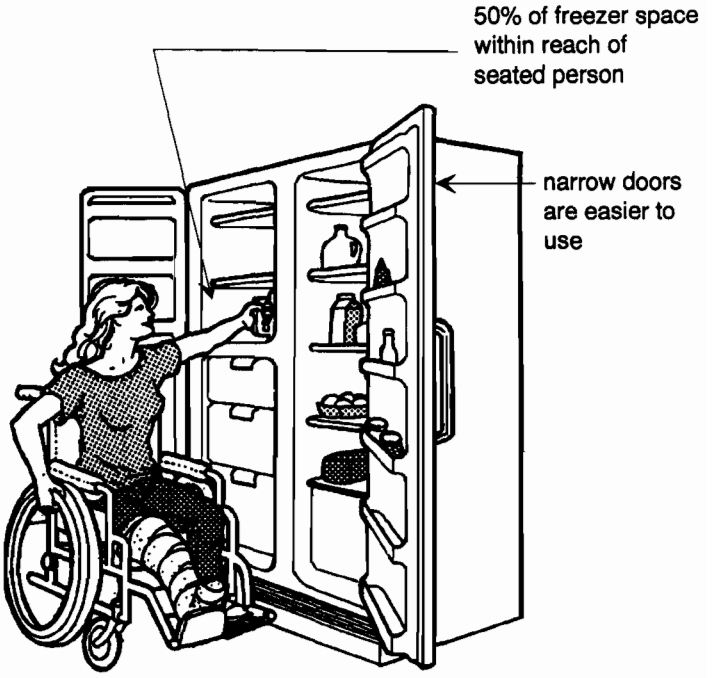

Side-by-Side Model

7. Cabinets and Similar Storage

Handles: When replacing cabinet handles and drawer pulls, use loop handles that do not require twisting of the wrist or fine finger manipulation. Loops should be large enough for several fingers.

Drawers: When replacing drawers or drawer hardware, consider using full extension drawer slides. The entire depth of the drawers will then extend enabling the user to view and reach the contents.

Corner Base Cabinets: Corner base cabinets are often "dead" spaces which are difficult to reach and use. The installation of revolving or extending semicircular shelves increases storage capacity and provides easier access for most users.

Pull-Out Shelves and Trays: Pull-out shelves and trays should be a standard feature in any kitchen storage area. Pull-outs can be incorporated into existing storage areas and/or new products with pull-out components can be purchased.

Replacing Base Cabinets With Banks of Full Extension Drawers: If entire base cabinets or cabinet runs are to be replaced consider installing some banks of full extension drawers. The drawers provide storage most people can reach. Drawers of different shapes and sizes should be included to store typical kitchen utensils, appliances, and food items.

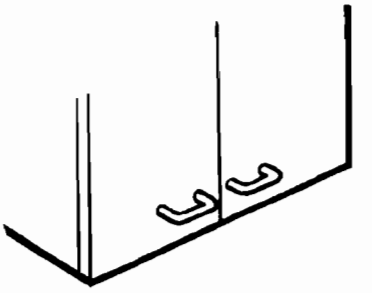

Loop Handles Horizontally Mounted

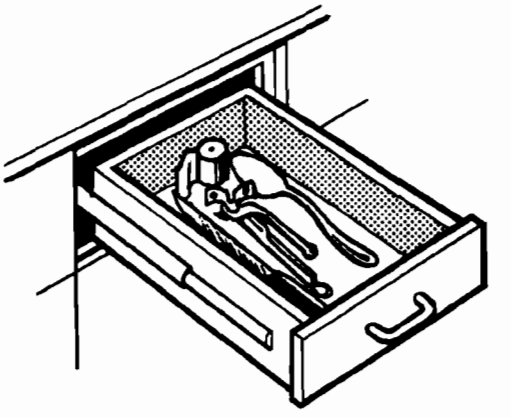

Fully Extended Drawer

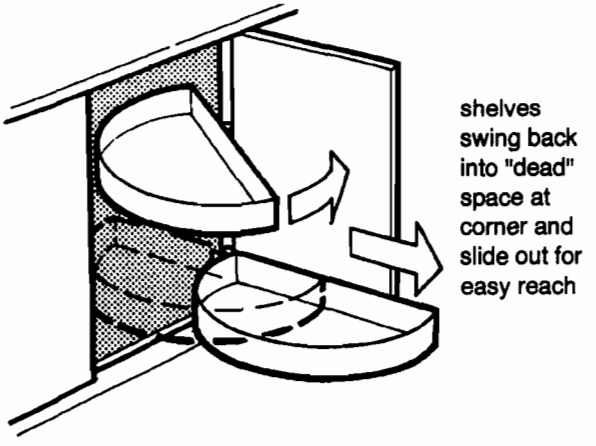

Rotating/Sliding Shelves

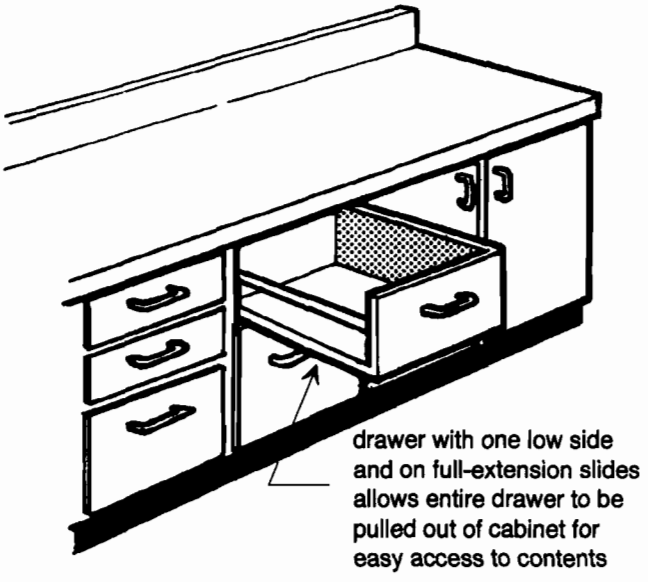

Extension Drawers

Pantry Storage: Most people can reach shelves mounted between 9 inches and 54 inches above the floor. Storage above 54 inches may be difficult to use by some people but usable by others and should not be totally eliminated.

When replacing deep, narrow pantry shelves, consider using pull-out or revolving shelves to make it easier to reach items stored at the back. Storage bins or baskets located on the back of pantry doors will also provide additional easy to reach storage space.

Wall Cabinet Replacement: Typically upper wall cabinets are mounted 54 inches to 56 inches above the floor, with even the first shelf out of reach for many people. The top shelf is used only by those over 5 feet 7 inches, who have no reaching problems.

When replacing cabinets, consider placing some with the bottom shelf no more than 48 inches above the floor, accessible to more people. Pull-down shelves can also be installed in cabinets to maximize usability for everyone.

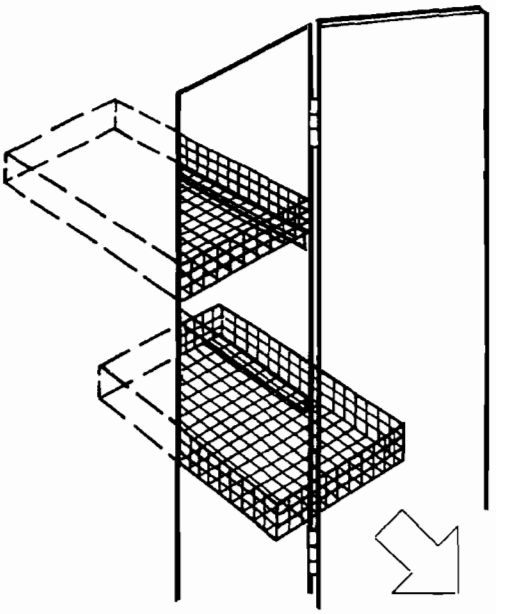

Pull-Out Shelves in Deep Narrow Pantry Cabinets

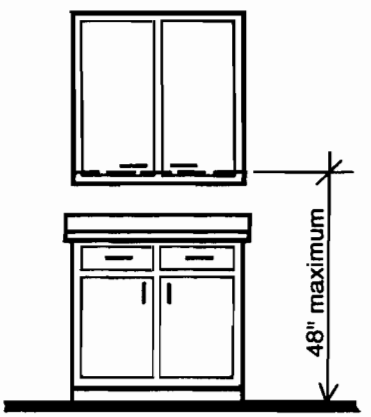

Wall Cabinet Shelf

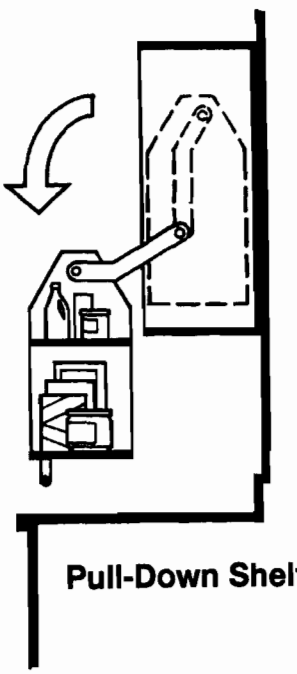

Pull-Down Shelf

8. Floor Surface Replacement

Non-Skid Flooring: Old flooring should be replaced with a non-skid type. Non-skid surfaces offer various degrees of traction that may be particularly beneficial for people using walkers or canes. For more detailed information see *Interior Floor Surfaces.*

9. Countertop Replacement

Placement: Countertops are typically mounted 36 inches above the floor, comfortable for the average person. When replacing or relocating countertops, consider mounting them at more than one level. A counter located 32 inches above the floor, for example, is more comfortable for a shorter individual, child, or person who is seated. Some tall people appreciate a higher counter, maybe 38 inches when standing, and a lower counter when performing tasks while seated. A small built-in table installed 30 to 32 inches above the floor at one end of the counter may be an option.

Adjustable Countertops: When replacing countertops consider using some adjustable counters that can be set at the best height for household members or to accommodate the changing needs of an individual throughout the lifespan. Removable base cabinets can be combined with adjustable counters to provide knee space or storage as needed.

Contrasting Edges: Contrasting edging on countertops helps people with visual impairments distinguish them from adjacent wall and cabinet surfaces. Contrasting edges in an otherwise monochromatic color scheme are helpful to everyone.

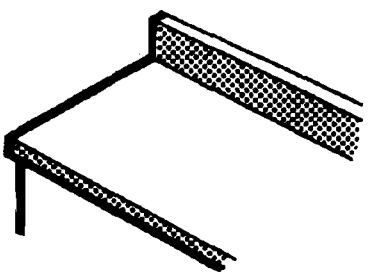

Contrasting Countertop Edge

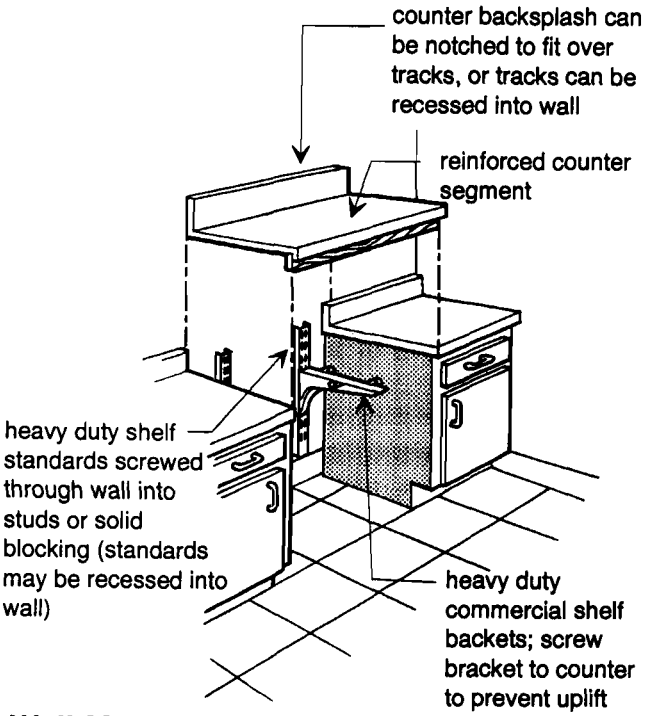

Wall-Mounted, Adjustable Support Brackets

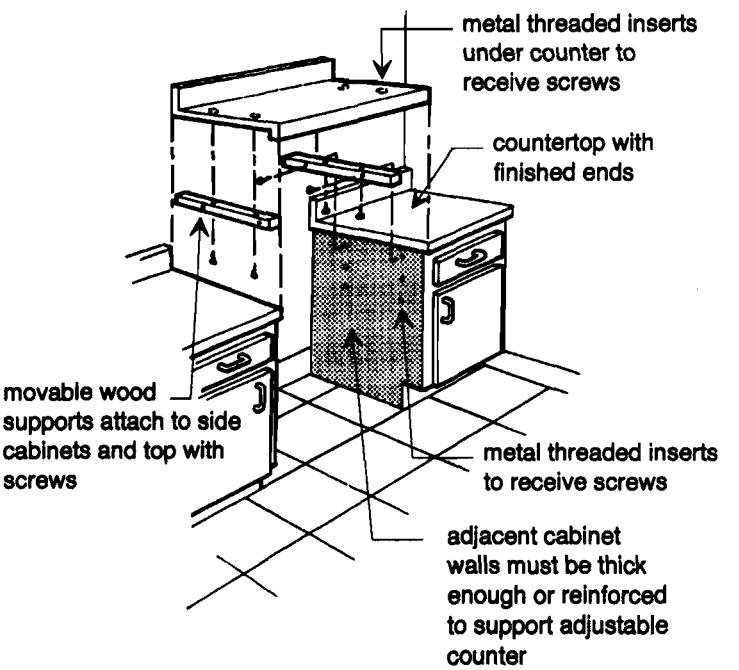

Movable Wood Support Strips for Adjusting Counter Height

Additional Changes to Meet Temporary or Individual Needs

- **Use hanging racks** to provide additional accessible storage space.
- **Use rolling carts** to provide additional accessible storage space.
- **Install sliding, revolving, pull-down, and/or motorized shelves** in difficult to reach storage spaces.
- **Use knob adapters** on appliances with difficult to use controls.

rolling carts provide movable storage that can be placed in a knee space and be moved out when the space is needed

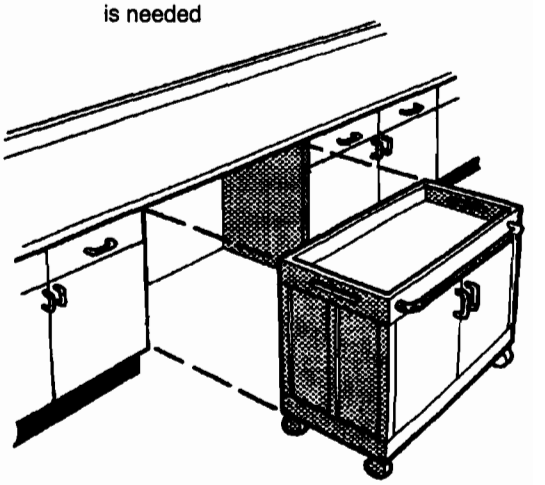

Movable Cart

Replacing the Entire Kitchen

Creating a totally accessible kitchen during a typical home remodeling project may be a difficult task. Appliance and sink location, counter configuration, and room space, for example, may prevent full wheelchair accessibility without relocating walls and major appliances. Such fundamental changes are more appropriately and practically addressed during a complete kitchen renovation.

The major accessibility standards and guidelines listed in *Appendix A* provide minimum specifications for accessible sinks, work counters, controls, and storage. The UFAS and ANSI standards have dwelling unit sections specifically for adaptable kitchens. These standards combined with publications listed in *Appendix B*, provide guidance for creating integrated designs which work well for everyone.

BATHROOMS

Common Barriers in Bathrooms

Remodeled Bathroom

Toilets

Lavatories

Vanities

Faucets

Towel Bars

Mirror/Medicine Cabinets

Bathtubs

Showers

Additional Changes to Meet Temporary or Individual Needs

Replacing Bathrooms

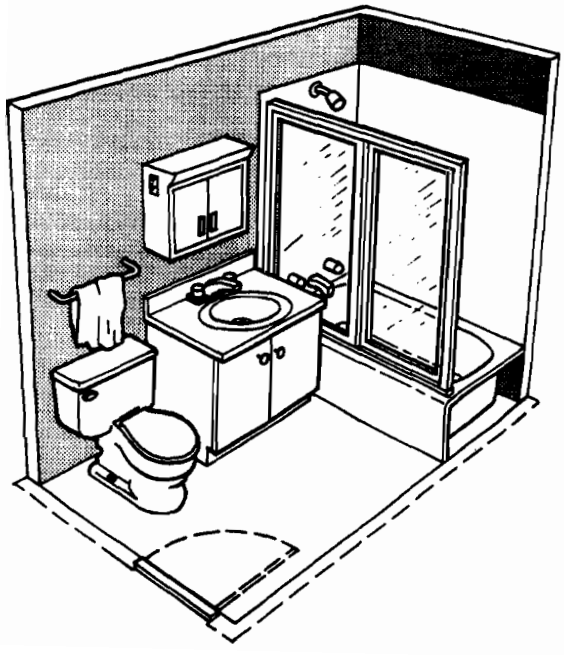

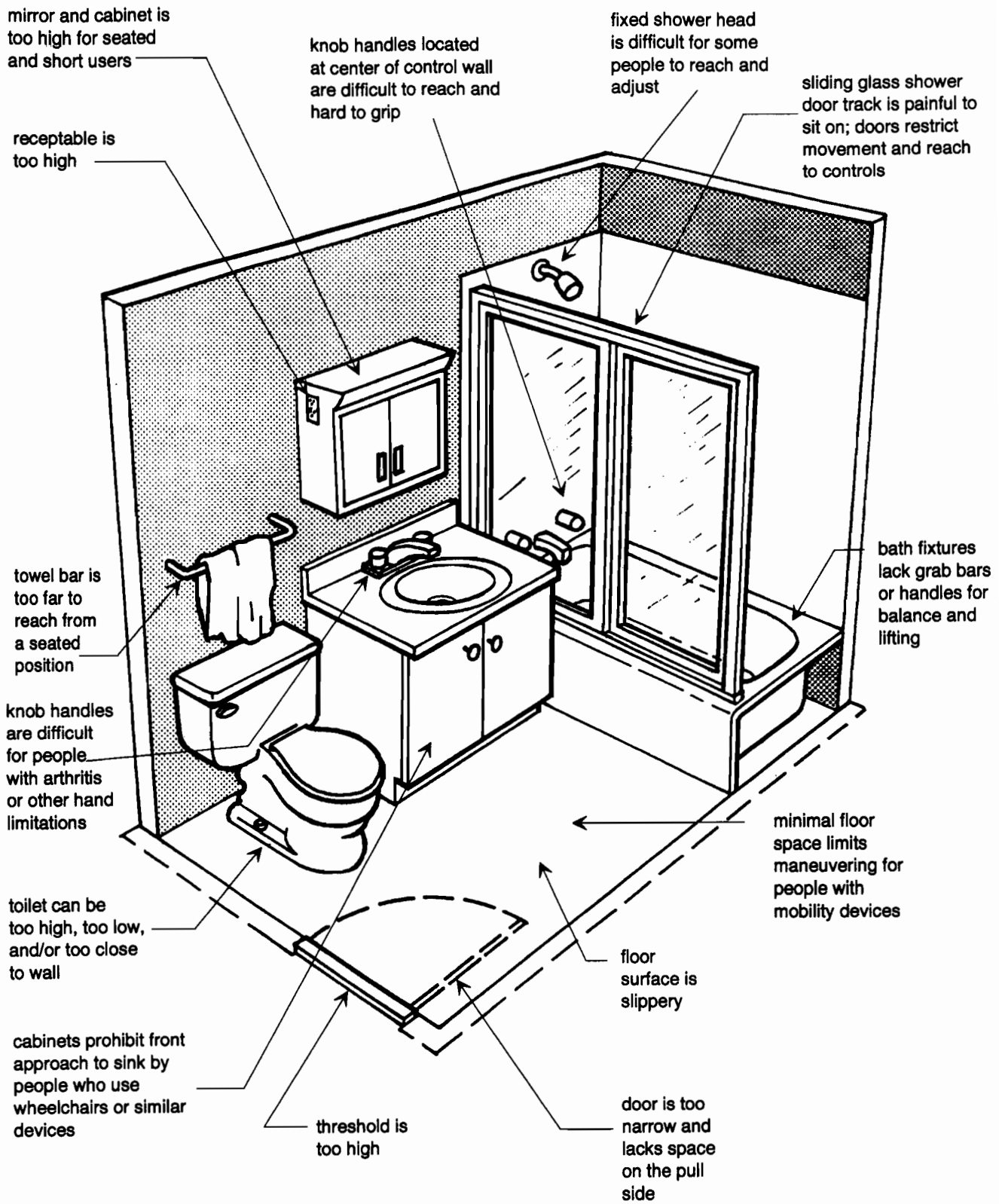

Common Barriers in Bathrooms

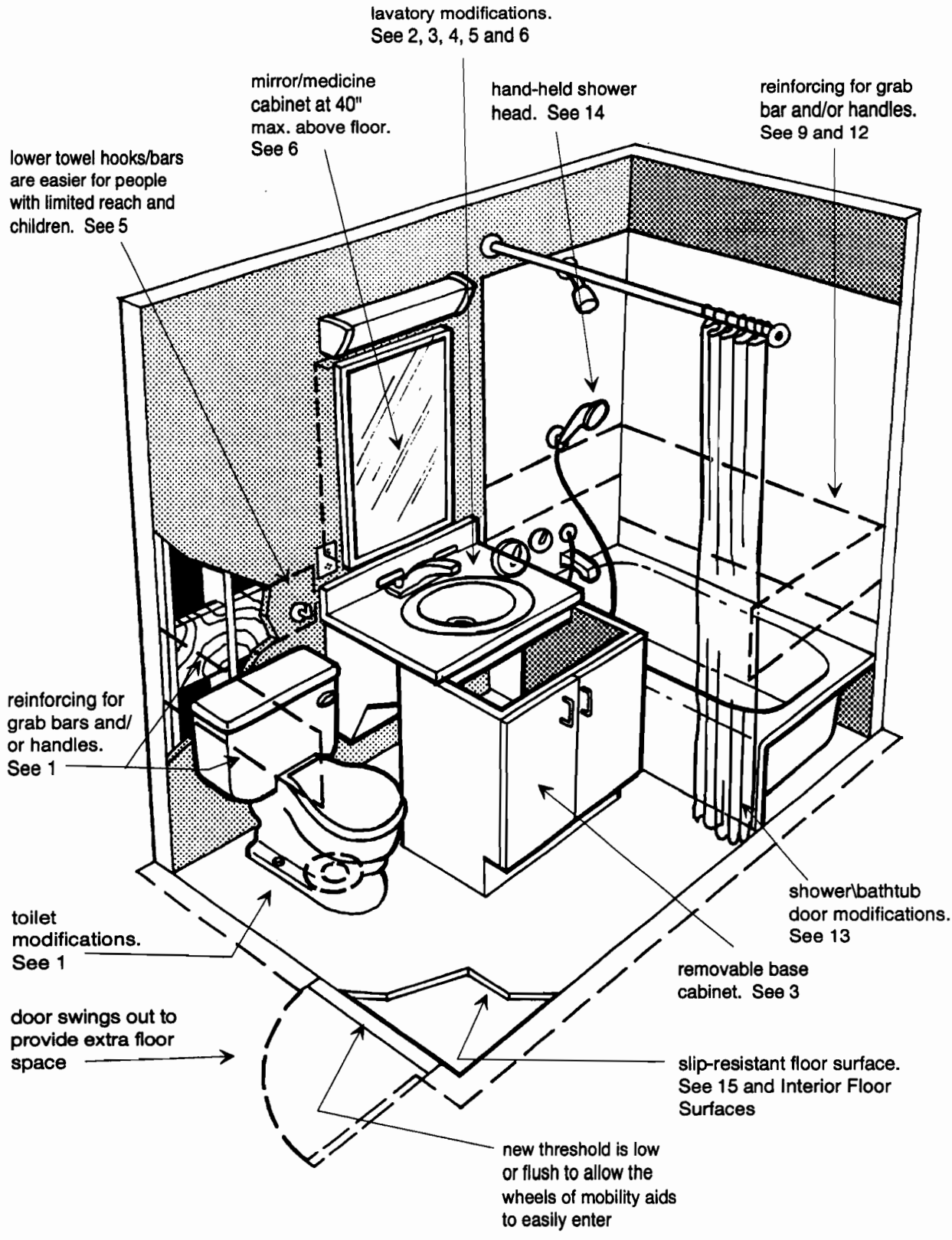

Remodeled Bathroom

Bathrooms

General: The bathroom is an area in which modifications can be made gradually to prepare for the future for ourselves, our guests, and new residents. We are all aging. Consider designing for your future when planning a bathroom face-lift, replacing or refinishing the walls, or replacing old fixtures. Although assistive products to solve temporary problems are available, the addition of permanent, attractive features that "happen" to be accessible can add value to a home.

1. Toilet Replacement

Location: As physical strength and agility diminishes, many people have difficulty both sitting down and rising from the toilet. At some time, wall-mounted or pull-down grab bars may be needed to provide assistance. When replacing the toilet, locate the new model 18 inches from side walls to facilitate the possible future addition of a grab bar mounted on the side wall. Installation of an offset flange will allow the toilet to be moved up to 3 inches without relocating the waste pipe.

Reinforcing: Reinforcing behind toilets is always recommended. If walls are to be opened at the replaced toilet, consider installing wall reinforcement for future safe addition of grab bars. Solid wood blocking or metal plates in areas designated by ANSI and/or ADAAG standards will suffice (see *Appendix A*). Whole wall reinforcing using plywood or other structural boards of sufficient strength permits greater flexibility to locate bars wherever they will be most helpful.

When the toilet is not located in a corner, a horizontally mounted grab bar behind the toilet may suffice for some while others may need a drop down grab bar.

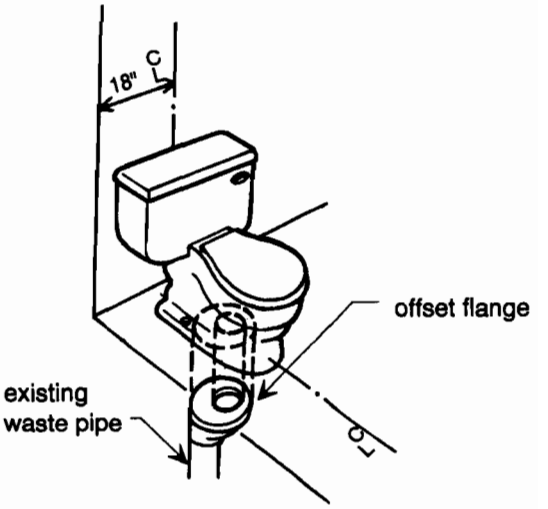

Offset Flange

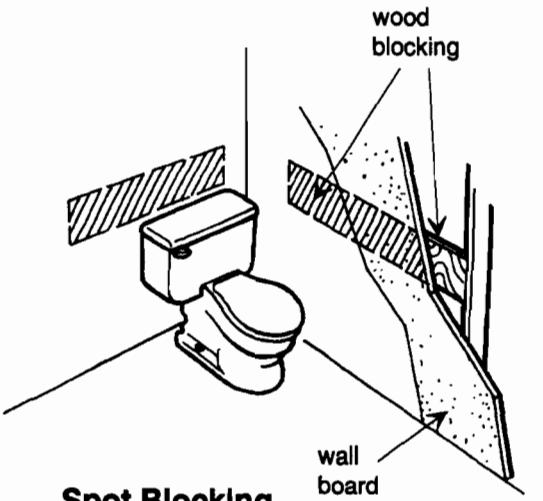

Spot Blocking

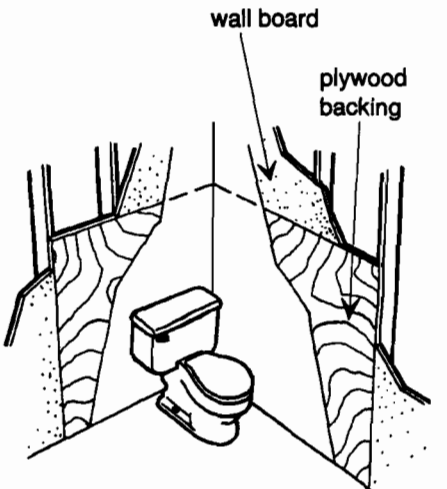

Whole Wall Reinforcing

Toilet Tank Replacement: If the toilet tank is being replaced, select an easy to use model with push button or lever flush handle located within the shortest reach distance. The flush handle should be located on the open side or away from a side wall for ease of use by most people.

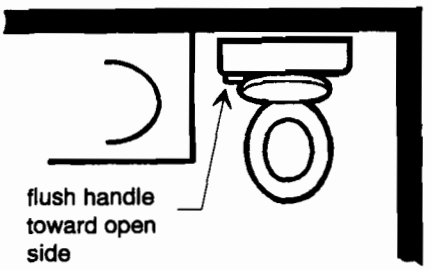

Flush Handle Location

2. Lavatory Replacement:

Wall-hung Fixtures

Depth: New lavatory fixtures should have a front to back depth of at least 17 inches to allow most seated people to use the basin and also provide adequate toe and knee space underneath.

Mounting Height: The top of the rim of a new lavatory should be no higher than 34 inches above the floor and the bottom of the front apron no lower than 29 inches above the floor. These clearances will allow seated people enough space to pull up underneath the fixture and reach the faucet and basin.

Apron Depth: When selecting a fixture, the apron depth should be considered to achieve the best mounting height. An apron depth of 4 inches or less typically allows the most flexibility.

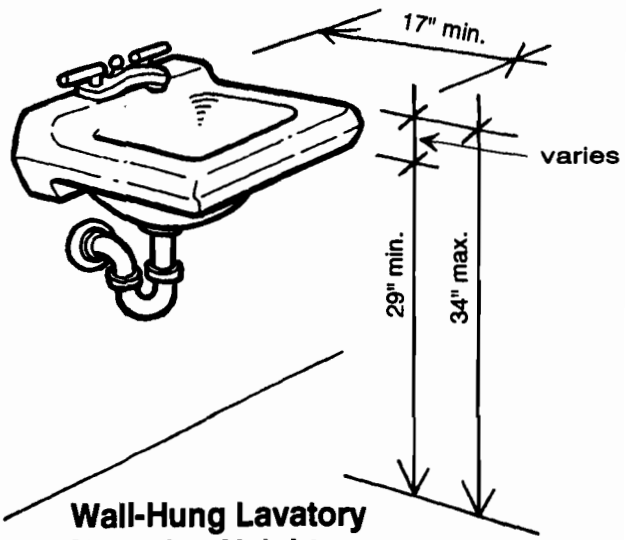

Wall-Hung Lavatory Mounting Heights

Countertop Fixtures

Location: When replacing a countertop with a lavatory locate the new fixture close to the front edge to reduce the reach to the faucet and basin.

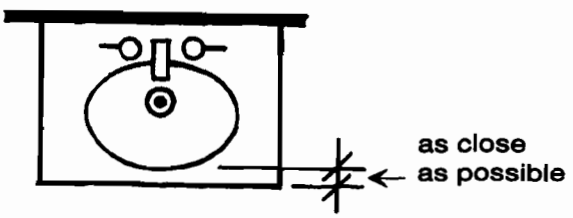

Countertop Lavatory Location

Mounting Height: A new lavatory and countertop should be mounted with the top of the counter no higher than 34 inches above the floor and the bottom of the front apron no lower than 29 inches above the floor. These clearances allow seated people space to pull up underneath the fixture and reach the faucet and basin. A lower height of 30 inches to 32 inches, while convenient for some, may be uncomfortable for most standing people. There is no ideal or perfect height.

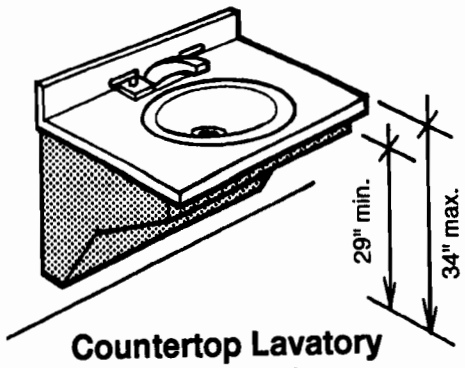

Countertop Lavatory Mounting Heights

3. Vanity Cabinet Replacement

Removable Cabinets: When replacing existing vanity cabinets, consider installing removable cabinets to allow users the choice to sit while using the lavatory at some time in the future. The cabinet looks no different than a stationary cabinet, but can be easily removed to allow for knee space or to increase maneuvering space in the bathroom. The cabinet could be reinstalled if the knee space were no longer desired.

The countertop must be mounted on the wall (see mounting height for countertop lavatories) with support brackets, a cabinet fitted around it, and the floor and wall finished beneath it. A pipe protection and appearance panel should be installed between the wall support brackets.

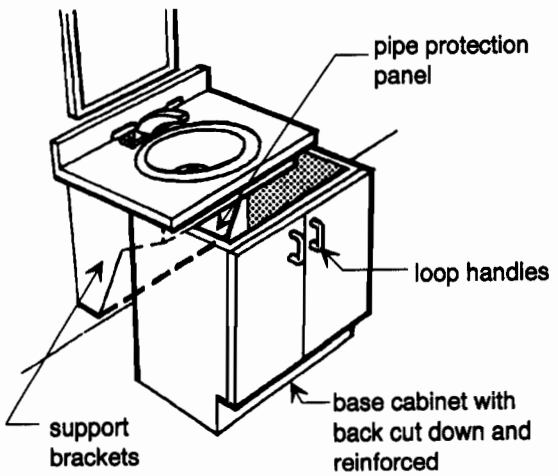

Removable Vanity Cabinet

4. Faucet Replacement

Lever Handles: When replacing existing handles, use lever or asymmetrical handles that do not require gripping to operate. People with arthritic hands or fingers typically have difficulty gripping and twisting knobs. A closed fist or open palm will operate a lever handle.

Single lever type faucets are the easiest for most people to use. Models with a high temperature stop to prevent accidental scalding are also available.

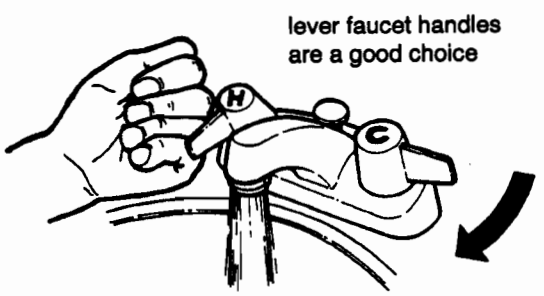

Lever Faucet Handles

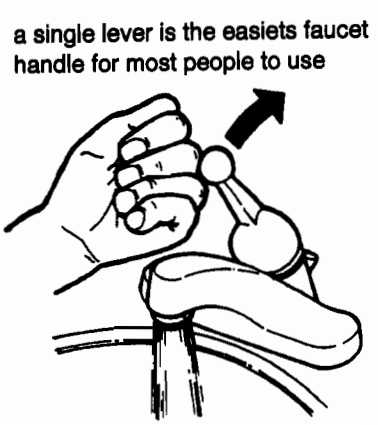

5. Towel Bar Addition or Replacement

New or replaced towel bars and hooks should be mounted 36 inches to 48 inches above the floor. Bars mounted at or below this height can be reached by most people whether they are sitting or standing, or have difficulty reaching.

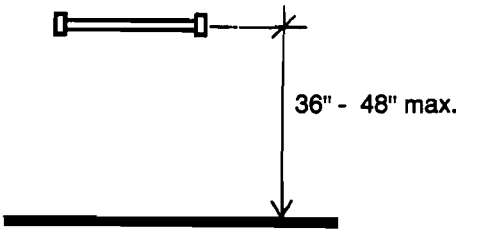

Towel Bar Height

6. Mirror or Medicine Cabinet Replacement

When replacing mirrors or medicine cabinets with mirrors, select a model at least 36 inches tall. Mount the bottom no more than 40 inches above the floor. Most residents will find this usable. A full length mirror is generally a welcome addition because it can be used by anyone.

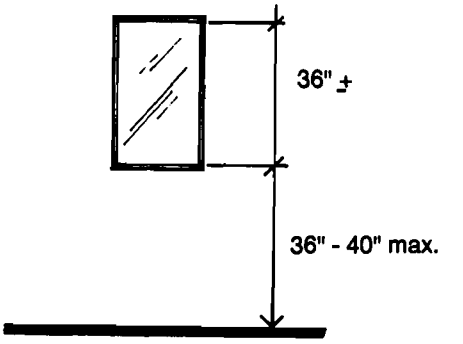

Mirror Height

7. Bathtub Replacement

Fixtures with Built-in Removable Seats: When replacing a bathtub, consider a model with a built-in removable seat. If the seat is needed either permanently or temporarily, it can easily be reinstalled. Some seats are self-storing and fold against the back wall.

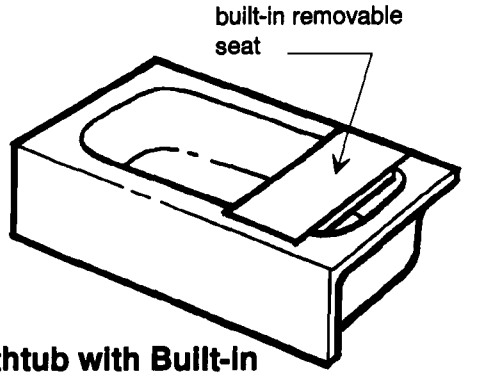

Bathtub with Built-in Removable Seat

8. Bathtub Faucet Replacement

Lever Handles: When replacing the bathtub faucet controls, select a model with lever handles, preferably a single lever model. Lever handles are easier to grip and turn than other types of faucet controls.

Location: When installing or relocating faucet controls on end walls, offset the control halfway between the center and outside of the enclosure. This location is easier and safer to reach.

Pressure Balanced Valves: Pressure balanced valves with a high temperature stop are available to prevent accidental scalding.

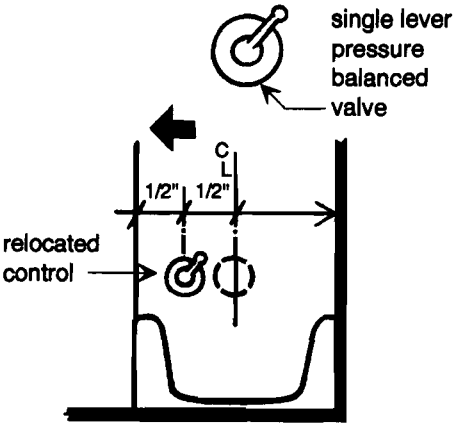

Offset Control Location

9. Bathtub Wall Surround Replacement

Reinforcing: If the bathtub wall surround is to be opened, this is an opportune time to consider installing wall reinforcement for future addition of grab bars. Solid wood blocking or metal plates in areas where designated by ANSI and/or ADAAG standards will suffice (see *Appendix A*). Reinforcing the whole wall with plywood or other structural board allows for the installation of bars at any time or location.

Most fiberglass and acrylic bathtubs are molded with integral wall panels. Some can be purchased with integral reinforced panels where grab bars may be needed. On unreinforced units, the panels alone will not support grab bars and are usually angled so as to touch the stud wall only at the top of a fixture. Blocking must be carefully shaped to fill in this angled gap between the wall panels and studs.

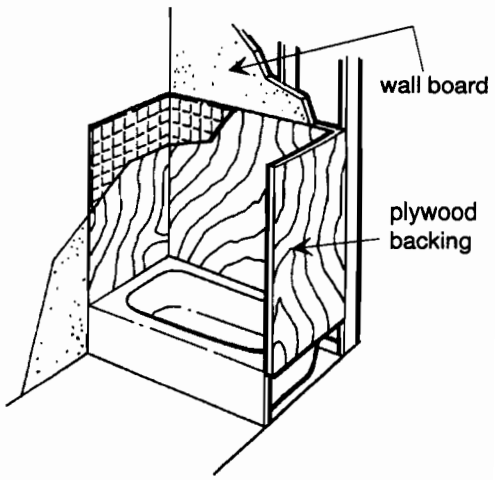

Whole Wall Reinforcement

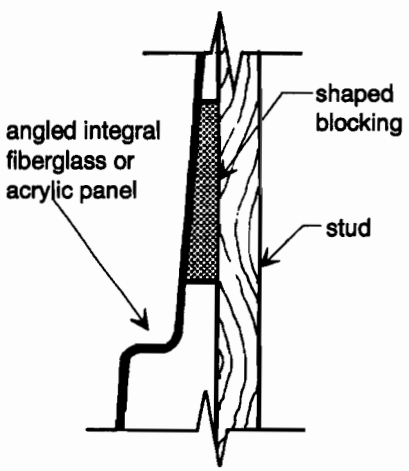

Shaped Blocking for Molded Fixtures

10. Shower Replacement

Shower Models: When replacing a shower, a 3 foot by 3 foot model with an integral or folding seat and a very low threshold is a choice that will accommodate many users. It fits the needs of people with limited stamina, those with poor balance or unsure leg strength, and individuals who like to sit down while showering. When equipped with an "L" shaped seat and a small 1/2-inch lip threshold the 3 foot by 3 foot shower can be used by almost everyone, including wheelchair users who can transfer onto shower seats.

Some people cannot transfer and need to use a bathing wheelchair. At least one dimension of such a shower is ideally 60 inches. Both roll-in and transfer showers with seats are available in fiberglass or acrylic, and some break down for remodeling installation. Sometimes a wet area roll-in can be created by removing a tub or shower and installing a drain, waterproofing, and tiling the entire bathroom floor area. Wet area and roll-in showers must have the drain carefully set and the floor sloped toward the drain from all

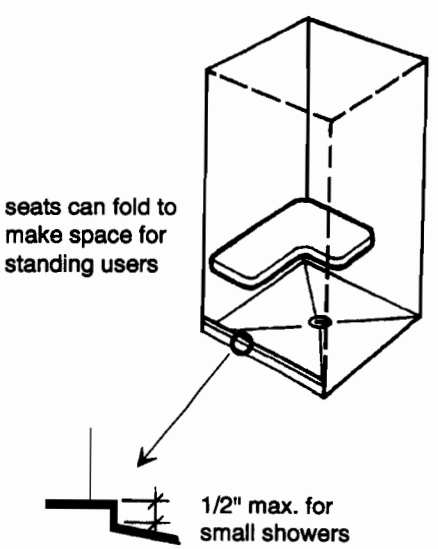

Shower With Seat and Low Threshold

Some people cannot transfer and need to use a bathing wheelchair. At least one dimension of such a shower is ideally 60 inches. Both roll-in and transfer showers with seats are available in fiberglass or acrylic, and some break down for remodeling installation. Sometimes a wet area roll-in can be created by removing a tub or shower and installing a drain, waterproofing, and tiling the entire bathroom floor area. Wet area and roll-in showers must have the drain carefully set and the floor sloped toward the drain from all points in the room. Extra large drains should be used if possible. If tile is used, a continuous waterproofing membrane must be carefully installed.

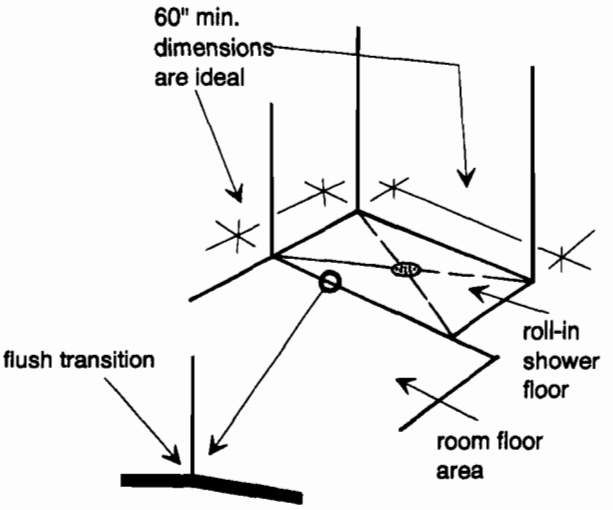

Large Shower With No Raised Threshold

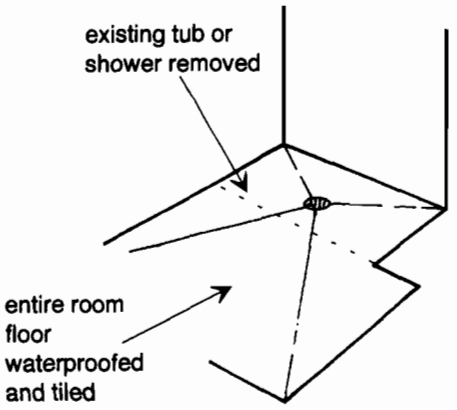

Whole Room Roll-in or Wet Area

11. Shower Faucet Replacement

Lever Handles: When replacing the faucet controls, select a lever handle model, preferably a single lever model. Lever handles are easier to operate than other faucet controls.

Location: When installing new faucet controls on the shower sidewall, offset the control close to the outside of the enclosure. Controls in this position can be easily operated from outside to set and test the water temperature before entering the shower.

Pressure Balanced Valves: Pressure balanced valves with a high temperature stop are available to prevent accidental scalding.

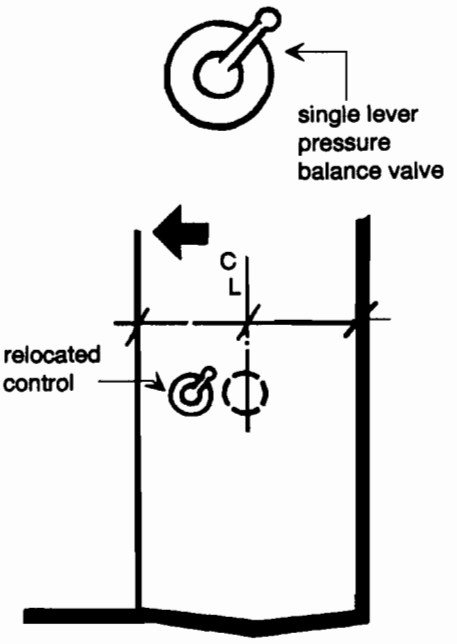

Offset Control Location

12. Shower Wall Surround Replacement

Reinforcing: If the shower wall surround is being replaced, consider installing wall reinforcement for future addition of grab bars or folding seats. Solid wood blocking, in locations where designated by ANSI and/or ADAAG standards, will suffice (*see Appendix A*). Whole wall reinforcing of plywood or other structural board allows the user the opportunity to install bars anywhere.

Most fiberglass and acrylic showers are molded with integral wall panels. Some can be purchased with integral reinforced panels where grab bars might be needed. On unreinforced units, the panels alone will not support grab bars and are usually angled so as to touch the stud wall only at the top of a fixture. Blocking must be carefully shaped to fill in this angled gap between the wall panels and studs.

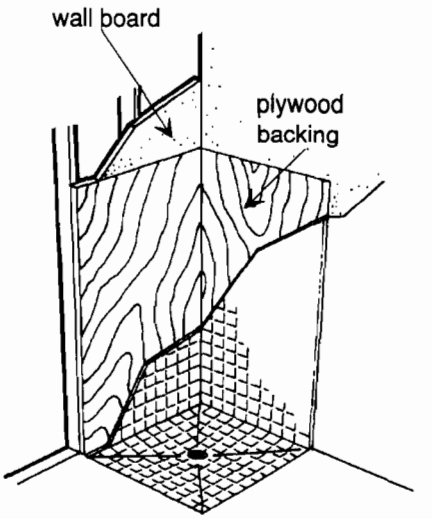

Whole Wall Reinforcement

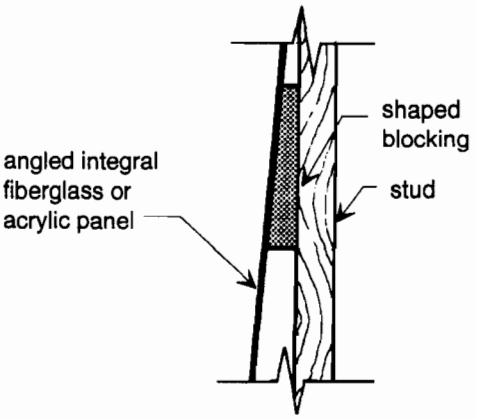

Shower Wall Surround Replacement

13. Shower/Bathtub Door Replacement

Eliminating the Door: If a shower/bathtub door must be replaced, consider eliminating the door and using a shower curtain. This will allow greater flexibility to locate bathing seats where needed and more space for getting in and out of the tub or shower.

Trackless Door: If space permits, trackless folding and combination sliding/swinging doors can be used. These doors do not require tracks mounted on bathtub rims or shower thresholds. They can be a wise alternative to traditional sliding doors especially for bathtubs where slider tracks are painful to sit on and can interfere with the use of bathtub seats.

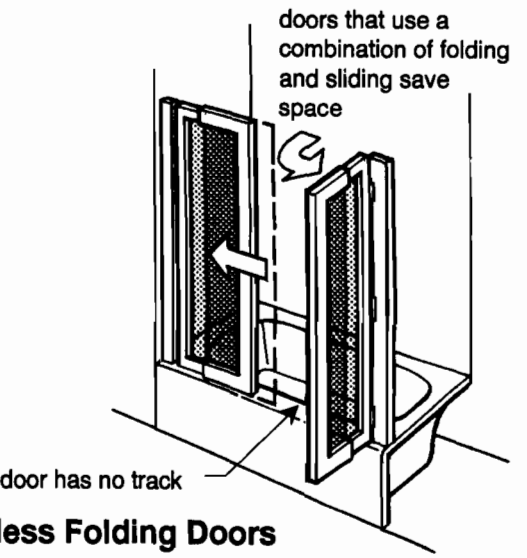

Trackless Folding Doors

14. Shower Head Replacement

Hand-held Shower Head: When replacing a fixed shower head, install a regular head with a "T" diverter valve and a hand-held shower head. The hand-held shower head is convenient for everyone and is particularly helpful to people who sit while bathing. Hand held units can also be added by replacing the tub filler spigot with one having a diverter and a hose with a shower head.

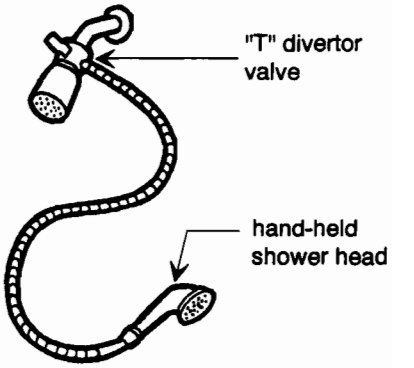

15. Floor Surface Replacement

General: Floor surfaces are an important feature of any space, particularly in bathrooms where moisture and slipping can be problems. See *Interior Floor Surfaces* for more details.

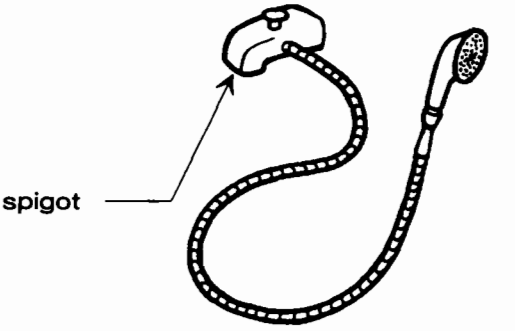

Hand-Held Showers

Additional Changes to Meet Temporary or Individual Needs

- **Add grab bars** where needed—use surface mounted method if wall blocking is not installed.
- **Add a portable clamp-on tub seat.**
- **Change door hinges** to offset type to increase the clear opening of a bathroom door by approximately 2 inches.
- **Add a thick seat** to raise toilet seat height 1-1/2 inches.
- **Add a spacer** to raise toilet seat height more than 1-1/2 inches.
- **Add lavatory pipe protection** - e.g. insulated wrap, manufactured pipe covers, or panels, for vanity cabinets.
- **Install loop handle hardware** on vanity cabinets.

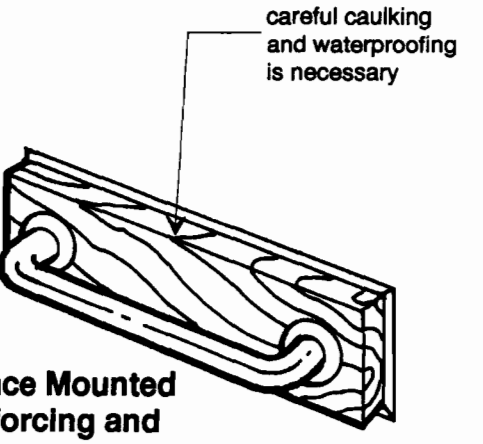

Surface Mounted Reinforcing and Grab Bar

Replacing the Whole Bathroom

Addition of the most critical features for a totally accessible bathroom would not be included in a typical remodeling project, especially providing adequate maneuvering space and relocating fixtures. If a complete bathroom renovation is planned or a new bathroom will be added, consider making it fully accessible or redesigning it to be adapted at a later date. A universally usable bathroom is accessible to everyone, including people who use wheelchairs.

Accessibility guidelines and standards listed in *Appendix A* provide specifications for accessible bathroom features. Additionally, both the UFAS and ANSI standards have dwelling unit sections. *Appendix B* lists other publications on accessible design techniques and examples.

LAUNDRY AREAS

Common Barriers in Laundry Areas

Remodeled Laundry Area

Appliances

Utility Sinks

Work Counter

Additional Changes to Meet Temporary or Individual Needs

Replacing or Adding Whole Laundries

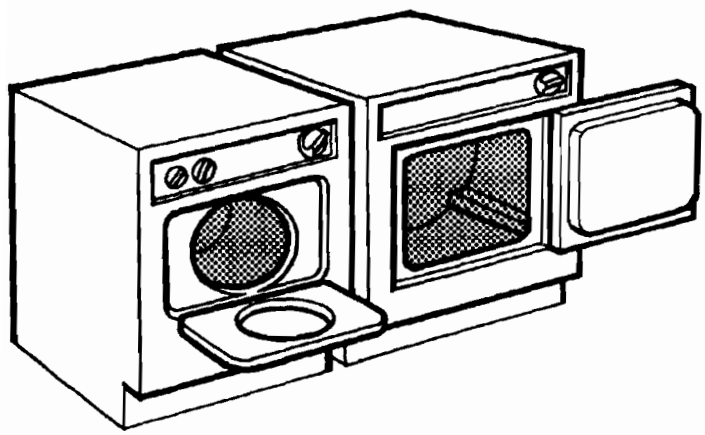

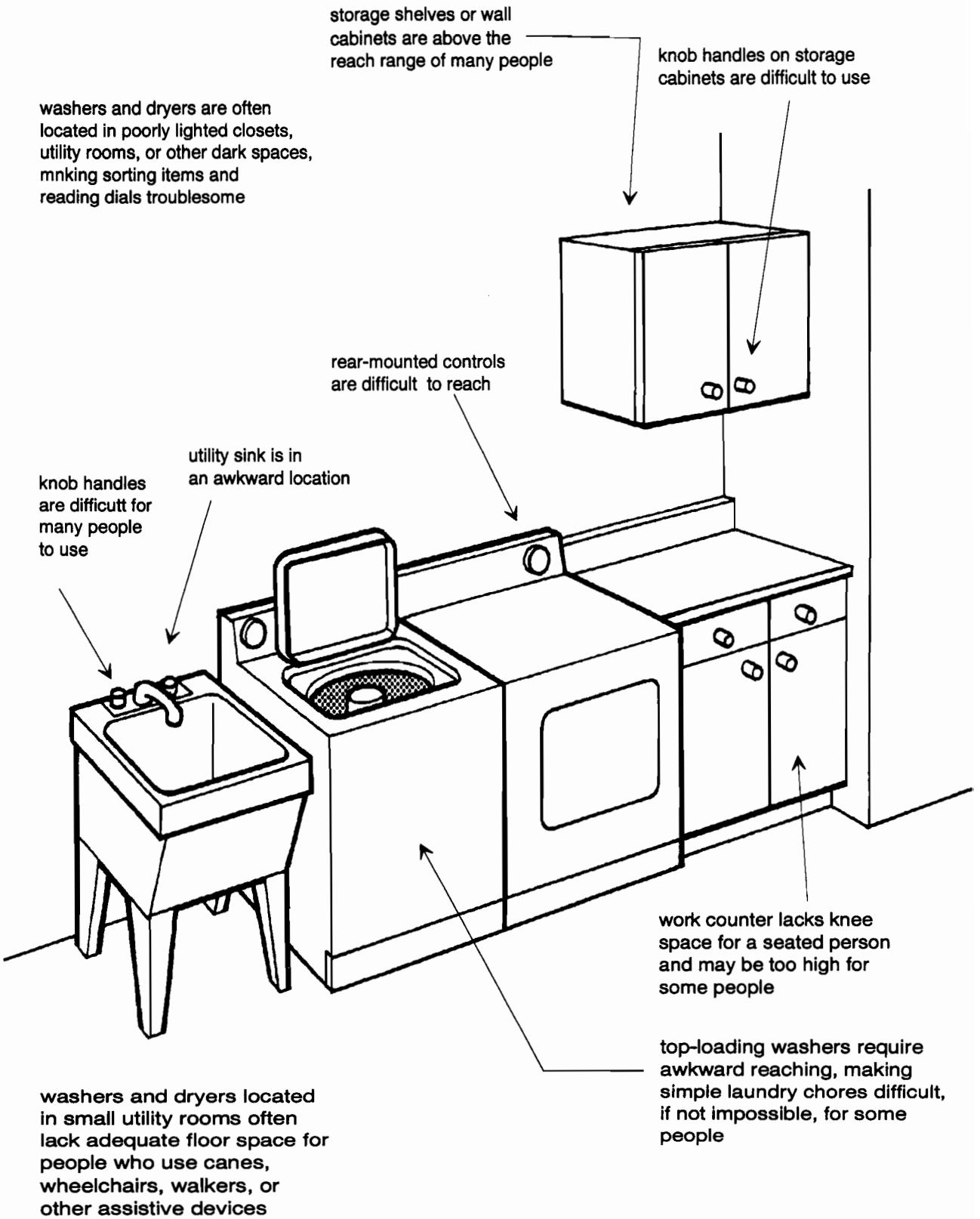

Common Barriers in Laundry Areas

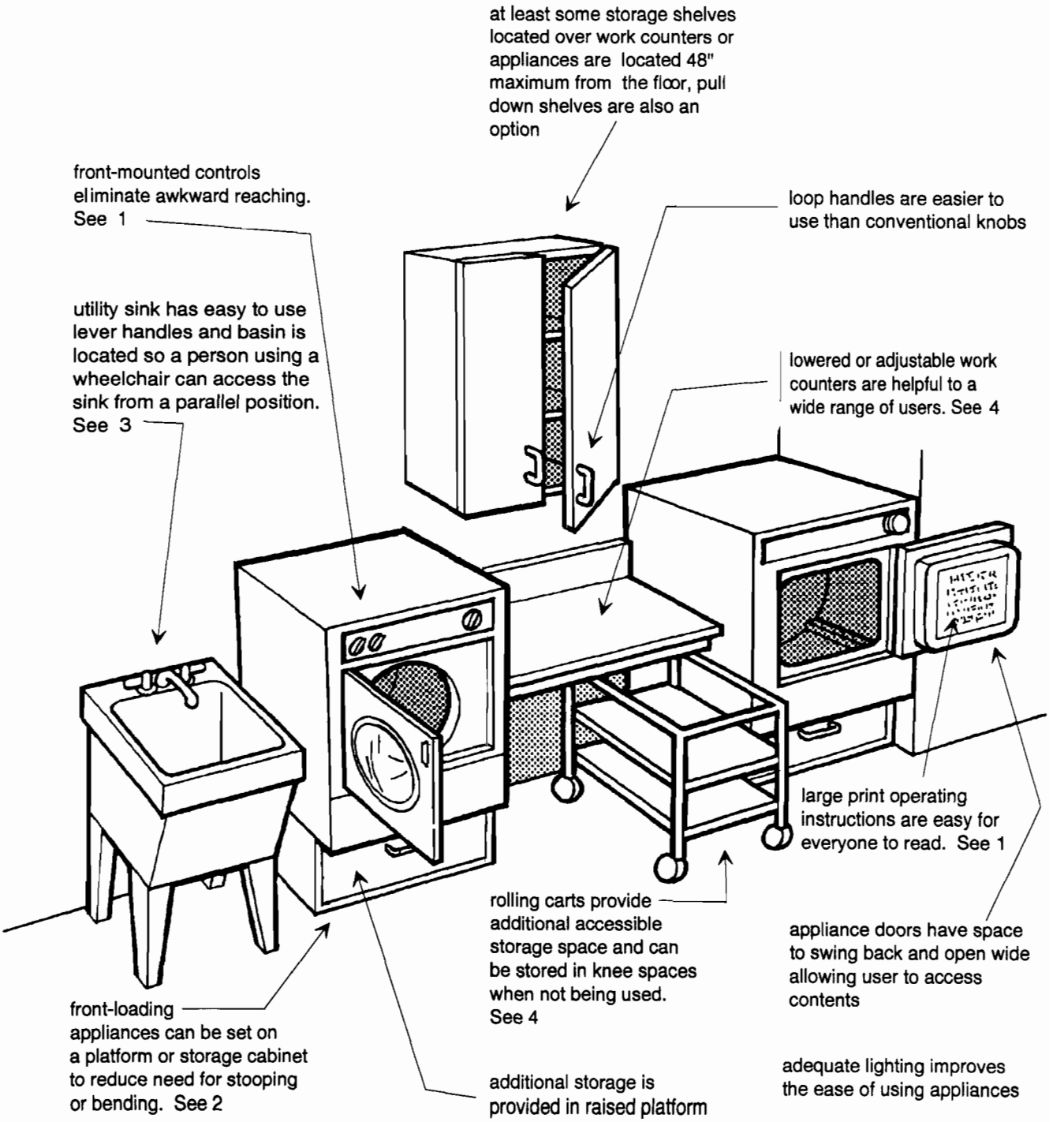

Remodeled Laundry Area

LAUNDRY AREAS

1. Appliance Replacement

Controls: Laundry appliances with front-mounted controls are easiest to use by most people and are especially preferred by shorter people, those with limited reach, and people who are seated. Adjusting dials mounted on the front without reaching across the washer or dryer is also more convenient and comfortable for those with unsure balance or individuals who rely on the support of a walker or cane. Controls that are at least 1-1/2 inches in diameter and designed with blade or lever extensions are easiest to use.

Door Location: Front-loading appliances are easier than top-loading machines for children, shorter people, elderly, and most people who use aids to stand and walk. For tall people or for people for whom reaching and bending are difficult, the washer and dryer could be placed on a raised platform to compensate.

Stacked Units: When combined stacked appliances are being up-dated, consider replacing with new models with front-mounted controls on the dryer located as low to the floor as possible. Stacked appliances are not as usable for a wide range of people as separate front-loading washers and dryers, but they may be the only feasible option where space is limited.

Instructions: Select appliances on which operating instructions appear in a large, easy to read typeface.

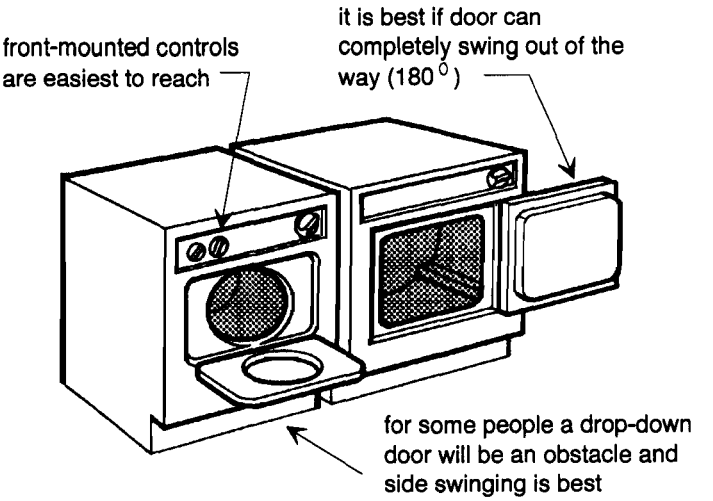

Easy-to-Use Appliances

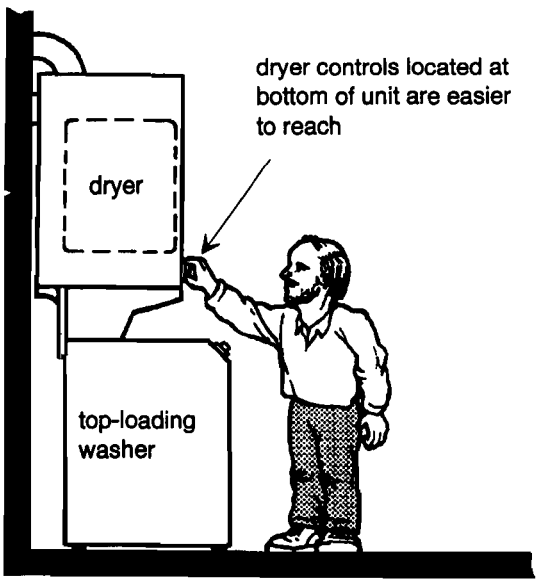

Reachable Controls on Stacked Washer/Dryer Unit

2. Appliance Height

General: The most easily used washers and dryers are front-loading machines with front-mounted controls, as noted above. Additionally, the appliances can be installed on a raised platform to make reaching inside more comfortable, especially for people with back problems. Bending, stooping, and reaching become increasingly difficult for older people.

Most washers, however, are top-loading and awkward, if not impossible, for some individuals to use. In such instances you may want to lower the washer below floor level. Although more people may comfortably use the lowered top-loading washer, associated drainage and maintenance problems may arise. The appliances, therefore, should be lowered only in very special circumstances and to meet a specific individual need.

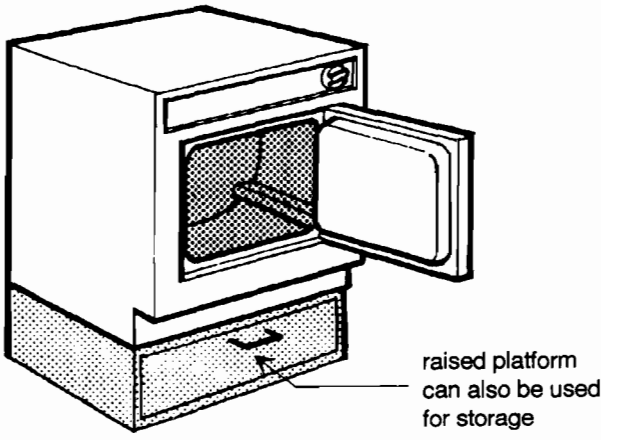

Raised Platform

3. Utility Sinks

Faucet Handles: When existing handles or faucets are being changed, replace with lever or asymmetrical handles that do not require gripping to operate. Most people as they age lose gripping and fingertip strength as well as the ability to comfortably twist the wrists. Lever handles that can be manipulated with a closed or opened hand are a wise choice.

Location: Utility sinks generally have deep basins that prevent adequate knee space underneath for a seated individual. To compensate somewhat, locate a new sink so it can be accessed from a parallel position.

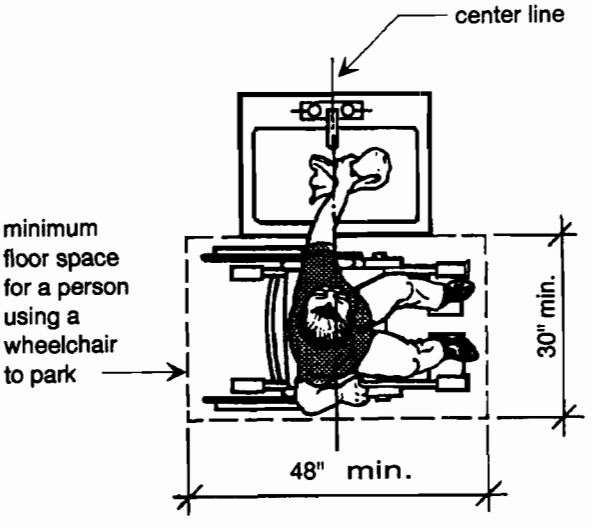

Parallel Approach to Sink

4. Work Counter Replacement

Removable Base Cabinets: Consider replacing traditional existing work counters with fixed base cabinets underneath with removable cabinets. This will allow the user to slide out the removable cabinet and sit while doing laundry. At a later date, the cabinet could be reinstalled if the knee space were no longer desired. The countertop must be mounted on the wall with support brackets so that a cabinet can be fitted under it and the floor finished beneath it. A wall-mounted table with a cabinet on rollers could be substituted.

Adjustable Countertops: Work countertops can be replaced with the adjustable type to allow for flexibility to accommodate different members of a household or the changing needs of an individual. Removable base cabinets or cabinets on rollers can also be combined with adjustable counters to provide knee space or storage as needed.

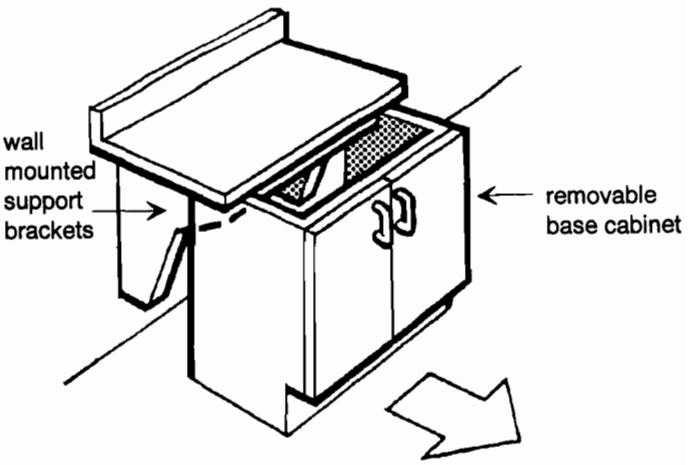

Removable Base Cabinet

Additional Changes to Meet Temporary or Individual Needs

- **Use grabbers or reachers** to help retrieve clothing in top-loading appliances.
- **Use rolling carts** to provide additional accessible storage space.
- **Install loop handle hardware** on storage cabinets.
- **Install platform** to raise appliances and improve access to interior.

Replacing or Adding Whole Laundry Areas

Laundry areas are frequently located in closets, narrow hallways, or other small utility spaces where movement and maneuverability are limited or awkward. When a new laundry space is being added or an existing space totally renovated, a higher level of accessibility can be provided. In addition to the above improvements, consider relocating appliances to more accessible locations, installing easy-to-use ironing boards, and enlarging the space. The major accessibility standards and guidelines listed in *Appendix A* provide minimum specifications for sinks, work counters, controls, and storage. UFAS and ANSI also have dwelling unit sections with specifications specifically for washers and dryers. Other publications listed in *Appendix B* provide additional information and examples of laundry designs that are usable by most people.

CLOTHES CLOSETS

Common Barriers in Closets

Remodeled Closet

Hanging Rods

Shelves

Lighting

Closets

Additional Changes to Meet Temporary or Individual Needs

Replacing or Adding Closets

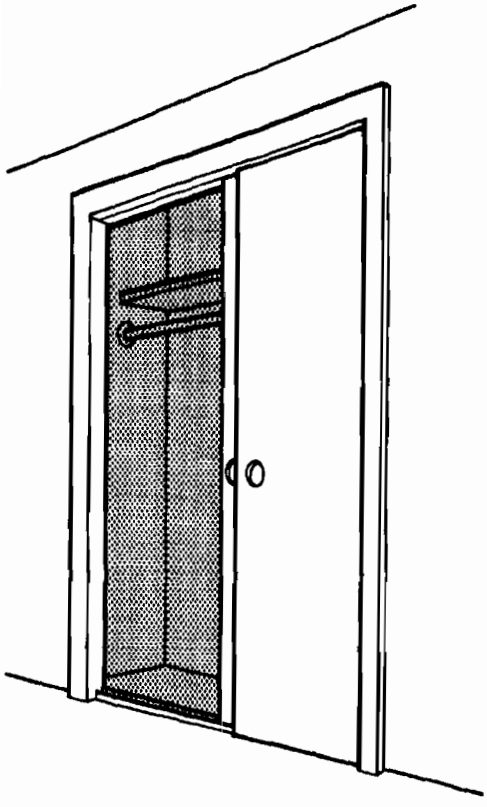

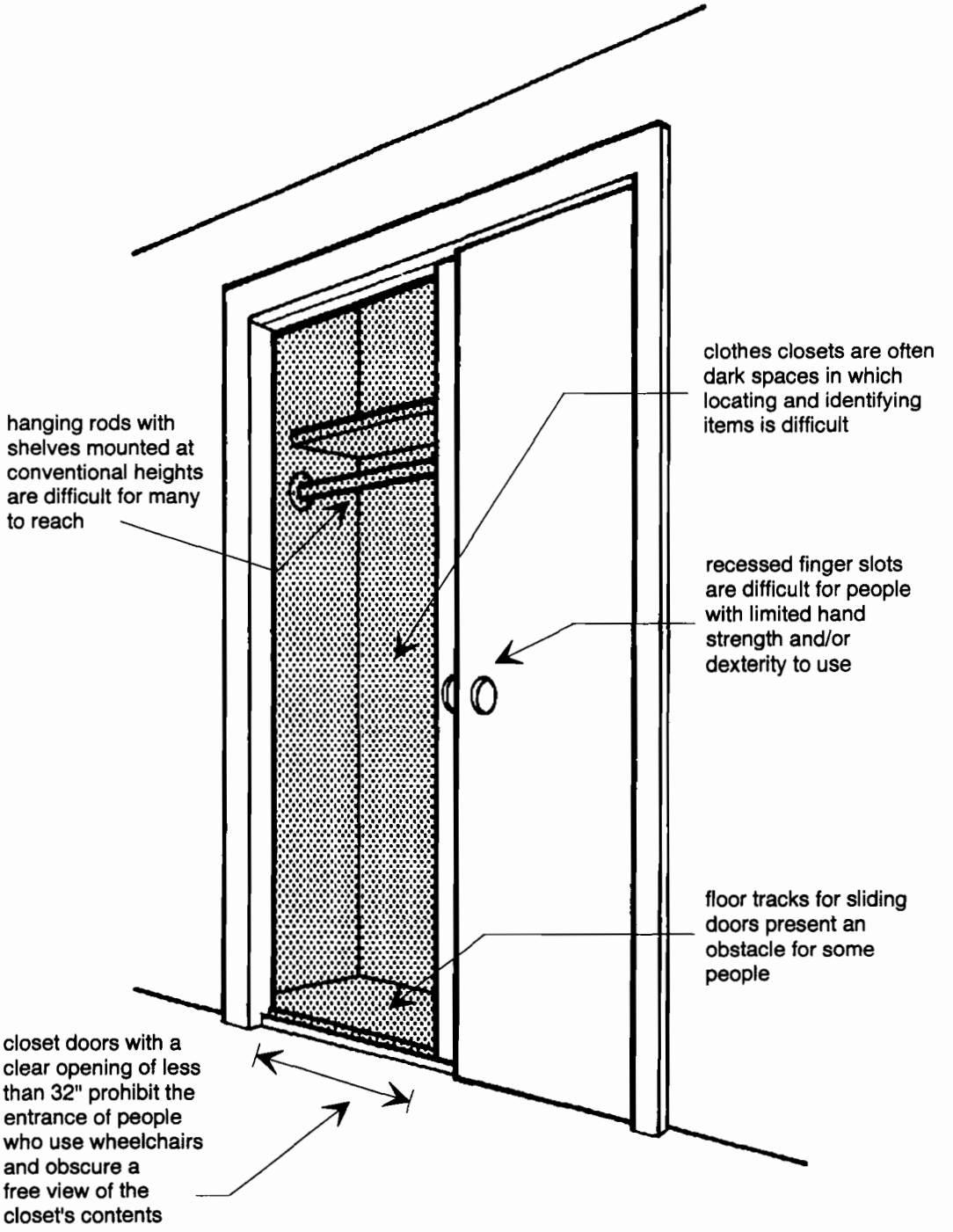

Common Barriers in Closets

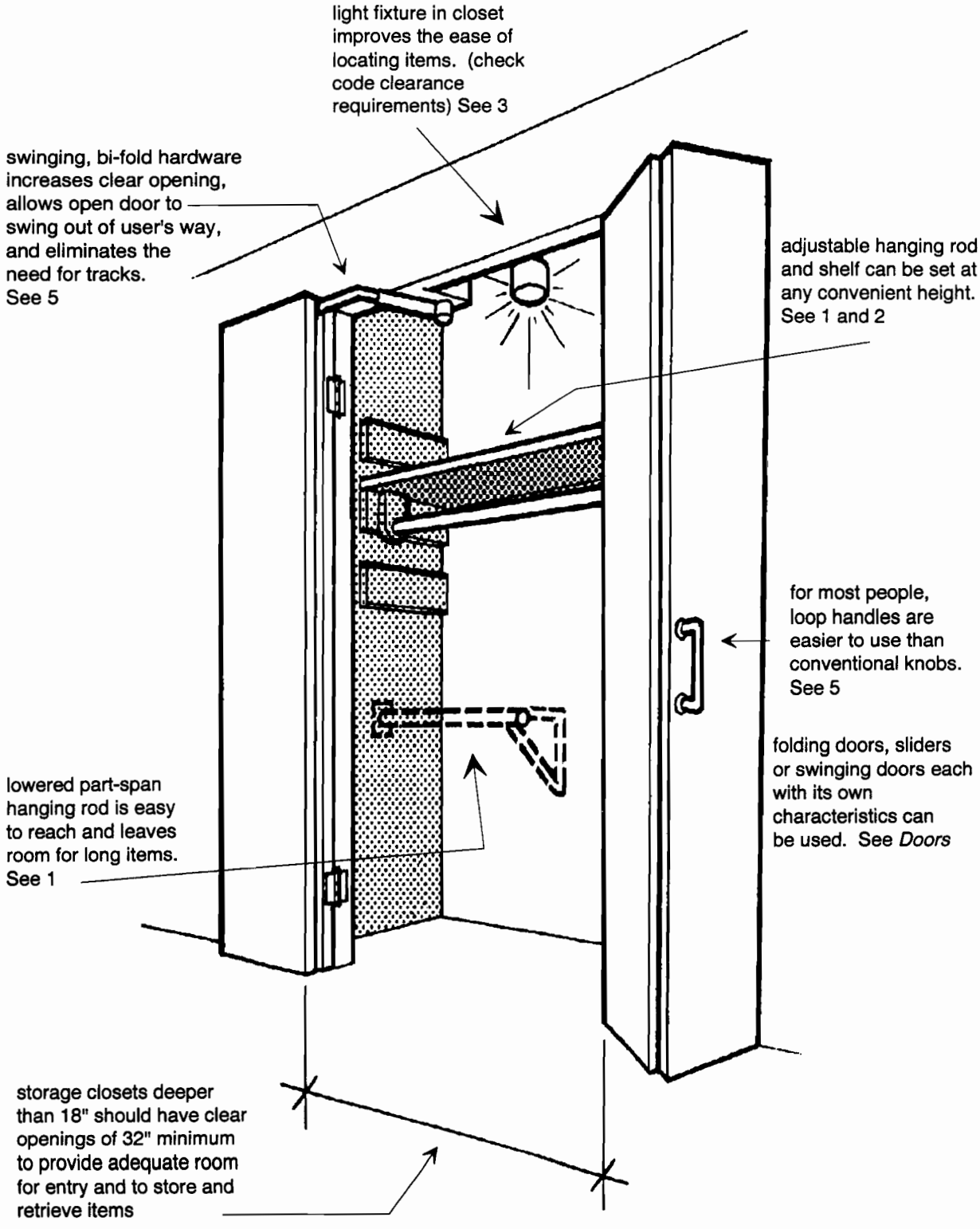

Remodeled Closet

Clothes Closets

1. Hanging Rod Replacement

Location of Fixed Rods: The optimal reach zone for most people is 20 inches to 44 inches above the floor and 20 inches deep maximum. Fixed hanging closet rods can be reached by most users when installed at 54 inches maximum above the floor. Some people experience difficulty reaching clothes hung on rods mounted at the conventional height.

Additional Low Hanging Rod: An option to consider when reconfiguring a closet is to install one hanging rod at the conventional height for long garments and a second rod at a lower height for shirts, skirts, and blouses. The new low rod can also be used by children, shorter adults, or people who have limited reach.

Adjustable Hanging Rod: The most flexible closet system is adjustable. Users can set the rod at the most convenient height for themselves, move it as their needs change over time, or adjust it for others who may use the closet in the future.

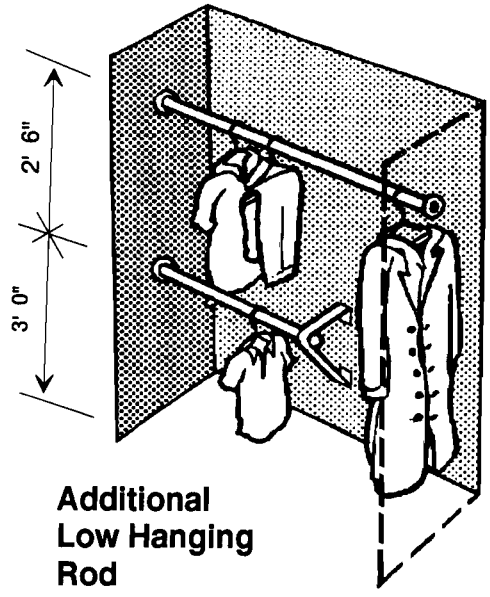

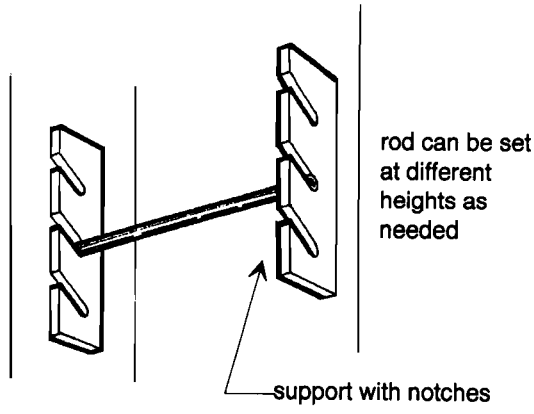

2. Shelf Replacement

Location: Shelves should be mounted no lower than 9 inches from the floor and if possible no higher than 54 inches although between 20 inches and 44 inches is preferable for people who have difficulty stooping, reaching, or bending. Shelves above 54 inches will be used by taller people and should not be totally eliminated.

Where there is a single fixed shelf over a hanging rod, the closet can be rearranged to add several levels of useful, easily accessed shelving below 54 inches.

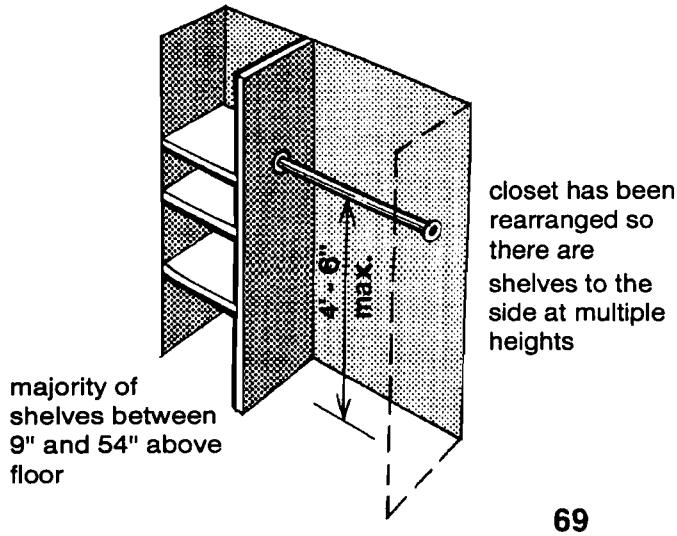

Adjustable Shelf: Adjustable shelves provide the greatest degree of flexibility, of course, since they can be moved to the most convenient arrangement for an individual at any time. The hanging rod and adjustable shelf may be combined into a single assembly that can be moved easily and provide even greater flexibility.

shelf and rod can be adjusted independent of each other

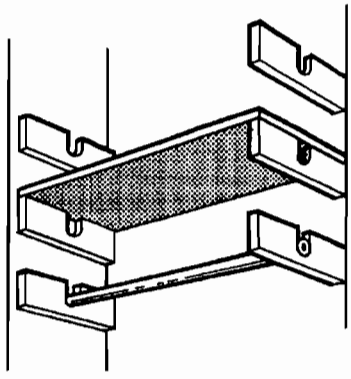

shelf and rod can be integrated into a single adjustable unit

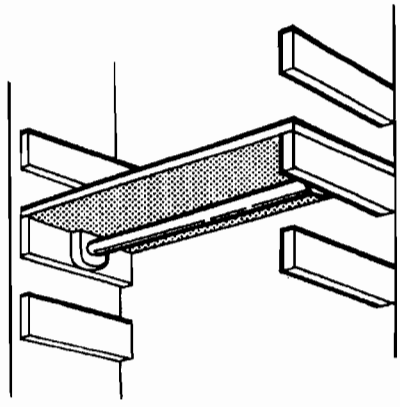

3. Lighting

Light Level: Closets are often dark. Consider adding one or even two light fixtures. (Check location and safety clearance requirements in your building code.) A well-lit closet is an advantage for everyone.

4. Walk-in Closets

General: Adding lower rods, rearranging shelves, using adjustable features, and installing light fixtures as discussed above, also improve walk-in closets for users. However, walk-in closets often are too small to allow entry, turning, and reaching of hangers by people who use mobility devices such as canes, walkers, or wheelchairs. To ensure their accessibility may require relocating walls, widening doors, changing door hardware, altering the door to swing out, or removing the door entirely.

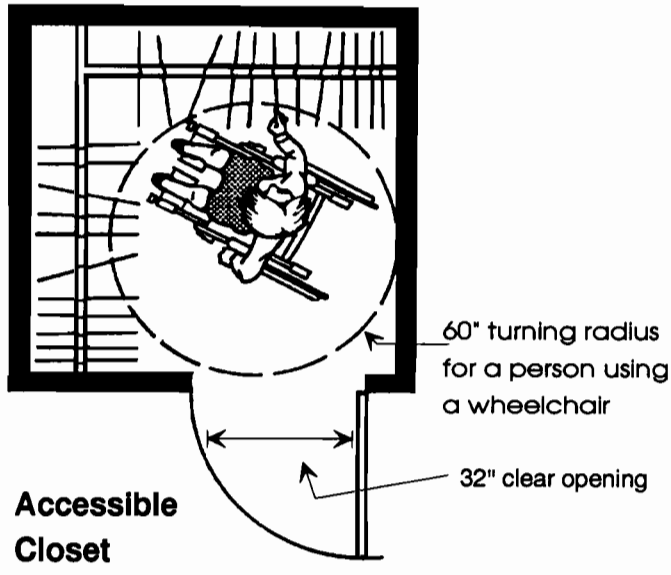

Accessible Closet

5. Closet Doors

General: Closets deeper than 18 inches should have clear openings of 32 inches minimum to provide adequate room to store and retrieve items. The door that offers the widest clear opening will be most usable by a broad range of people. Bi-fold doors with swinging hardware eliminate the need for tracks and can be swung against the wall out of the way to increase the clear opening. The entire contents of the closet can be seen from outside the opened door. Maneuvering space at and into the closet is increased due to track elimination. If sliding doors are used, select a high quality track to ensure a smooth, effortless opening. Install loop handles instead of knobs for ease of use. Avoid recessed finger slots and small loops that require fingertip dexterity and strength and are difficult for many people to use. (See *Interior Doors.*)

Additional Changes to Meet Temporary or Individual Needs

- **Install additional lowered hanging rod.**
- **Install combination adjustable shelf and hanging rod.**
- **Install loop handle** on closet doors.
- **Install swing-away hinges** to increase width of door opening.

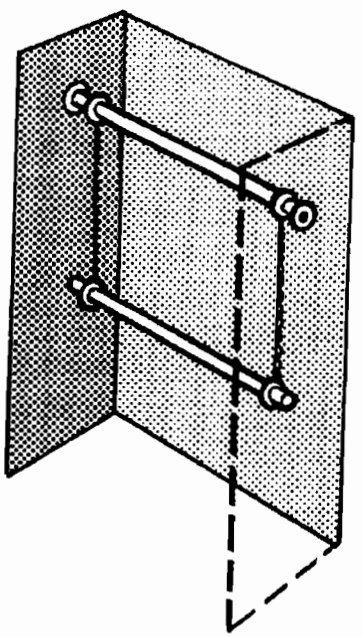

"add-on" hanging rods can be purchased

Replacing or Adding Clothes Storage Areas

Adding a closet or completely renovating existing clothes closets offers an opportunity to make the storage space usable for everyone. In addition to the features suggested above, totally accessible closets are positioned to provide the clear floor space required by a person using a wheelchair or other mobility device. The closet opening should be at least 32 inches clear. For example, a person who uses a wheelchair or similar mobility device will require adequate floor space to maneuver to, around, and in the closet. The clear opening width of closet doors may be critical. The major accessibility standards listed in *Appendix A* offer guidance for providing appropriate maneuvering space and door width at closets. Publications listed in *Appendix B* offer additional assistance in planning and designing storage space that is usable by everyone.

INTERIOR STAIRS

Common Barriers on Interior Stairs

Remodeled Stairs

Treads and Risers

Railings

Drop-Offs

Additional Changes to Meet Temporary or Individual Needs

Replacing or Installing Entire Stairs

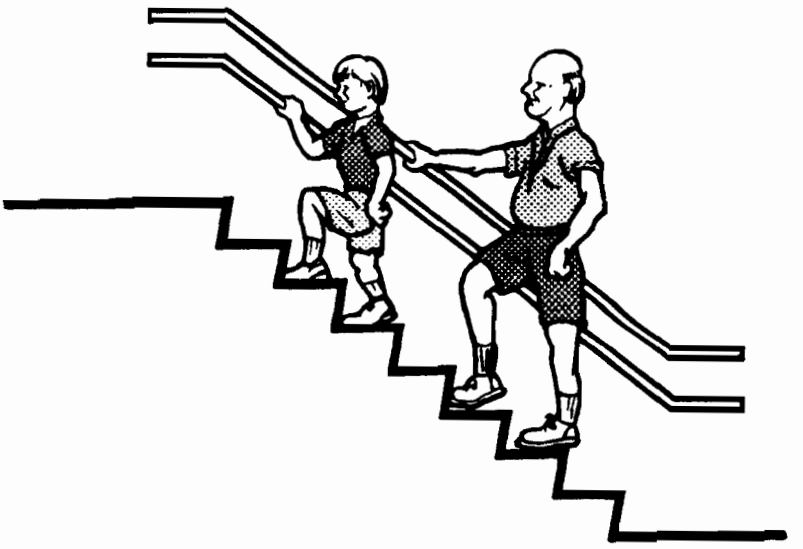

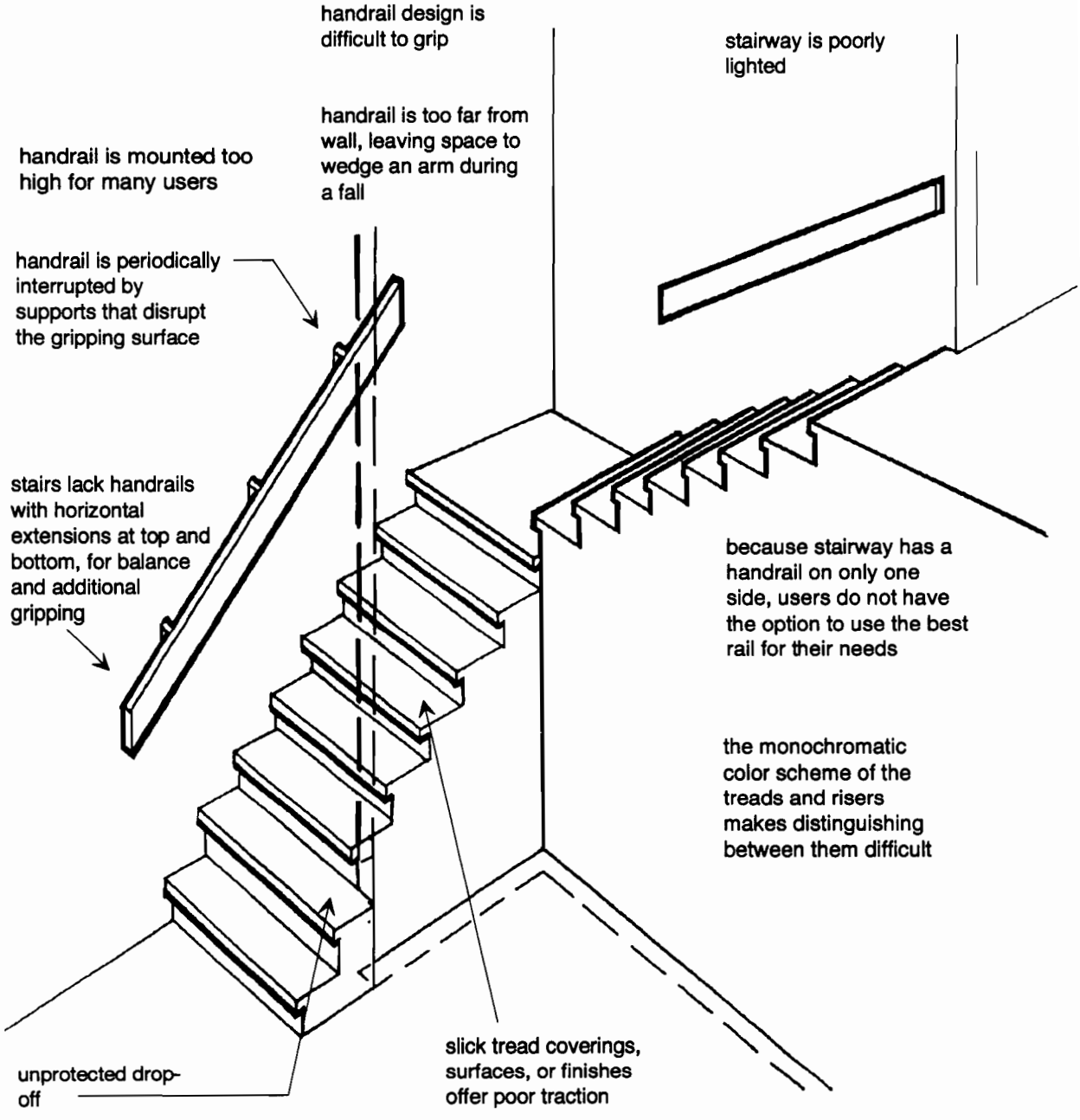

Common Barriers on Interior Stairs

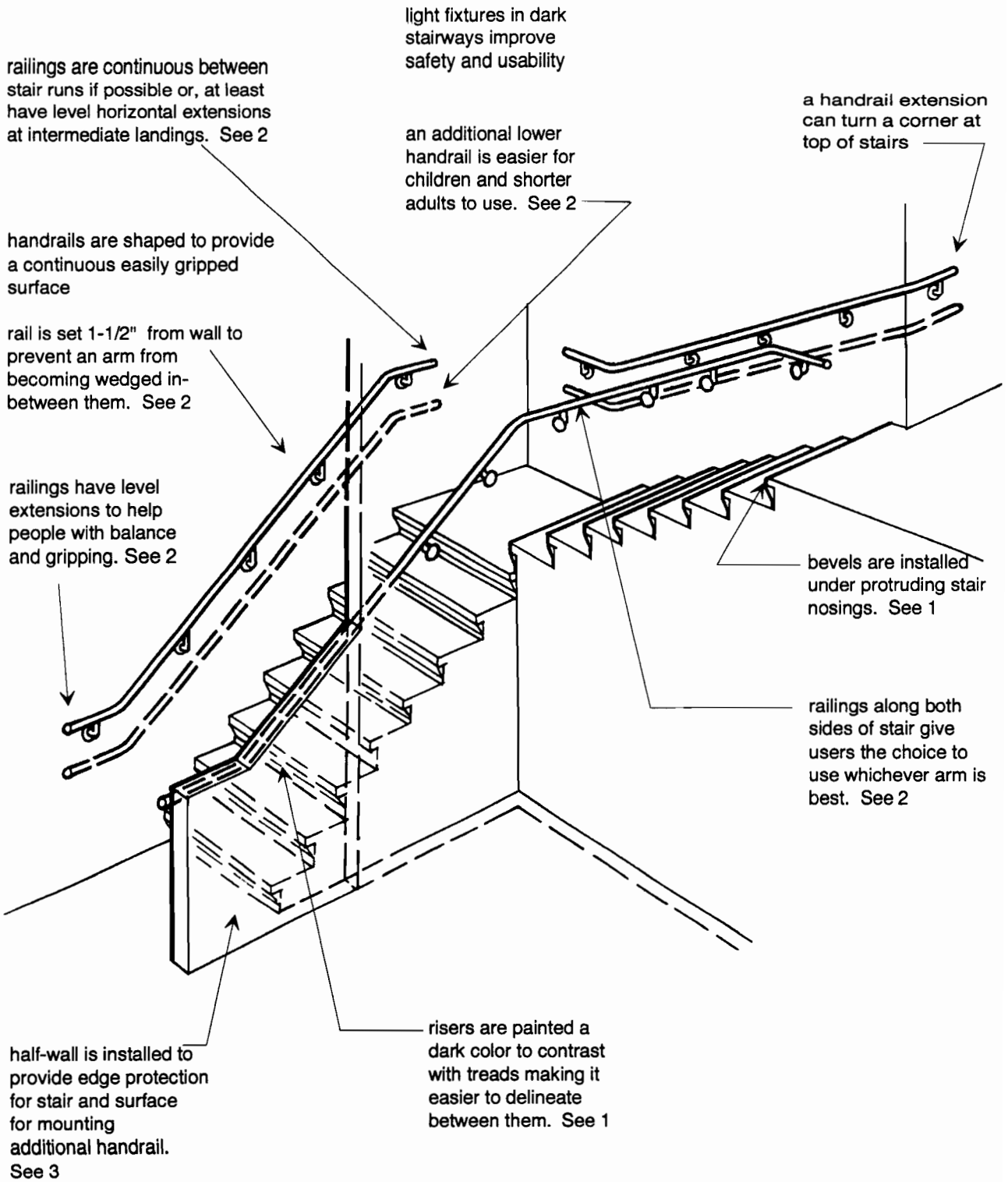

Remodeled Stairs

Interior Stairs

1. Treads and Risers

General: Structural and space factors limit modifications that can be practically undertaken to improve the design or dimensions of treads and risers during remodeling projects, since a change in riser height or tread depth alters the space required for the entire stairway. However, improvements in the following stair elements can be considered.

Surfaces: Select stair coverings, surface materials, and finishes which offer good traction for secure footing. If it is not feasible to redo a slippery stair, consider application of an abrasive strip at the edge. See *Interior Floor Surfaces* for additional details.

Contrast: Selecting treads and risers of contrasting color may be a wise choice when refinishing or replacing treads and risers. Monochromatic color schemes make it harder to distinguish risers and treads, especially among people with vision impairments.

Nosings: Rounded nosings on treads can be used instead of square nosings (the radius of curvature should not be too large), or risers can be angled with a "backslope" to eliminate the lip created by a nosing. Replacing floor coverings, treads, or risers offers an opportunity to change nosing profile.

Size: Stair treads and risers that are of uniform size throughout the entire stairway help to maintain the body's natural rhythm of movement in ascent and descent. While changing tread depth may be difficult or impossible in most remodeling projects, there are issues to consider should the opportunity to do so arise, especially if the older stairs are particularly steep. Deeper treads generally provide more room for people with walking and balance difficulties to place their feet.

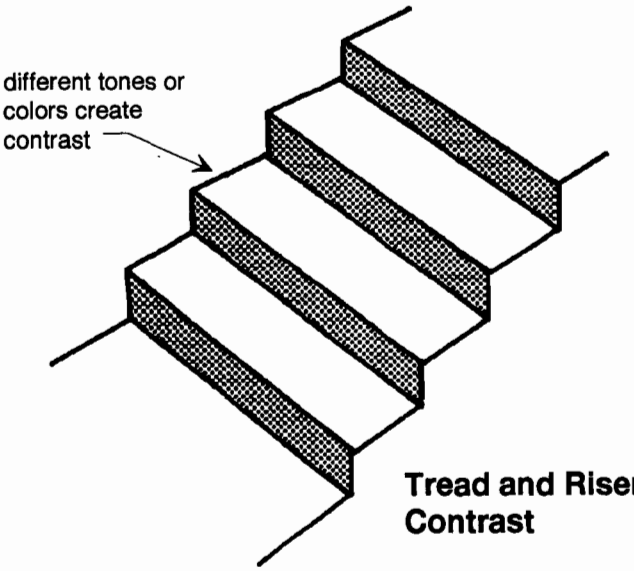

Tread and Riser Contrast

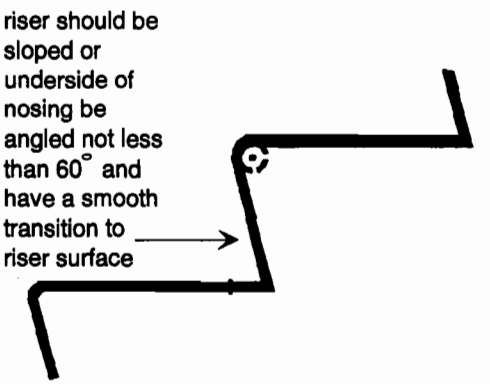

Nosing Design

2. Stairway Railings

Mounting Height: New handrails should be mounted with the top gripping surface between 30 inches and 38 inches above floor and tread surfaces. This height works well for most adults but may be too high, particularly at the upper range, for many children and adults of short stature. Consider installing an additional lower handrail for children and shorter people. Consult your state and local codes for specific handrail mounting height requirements.

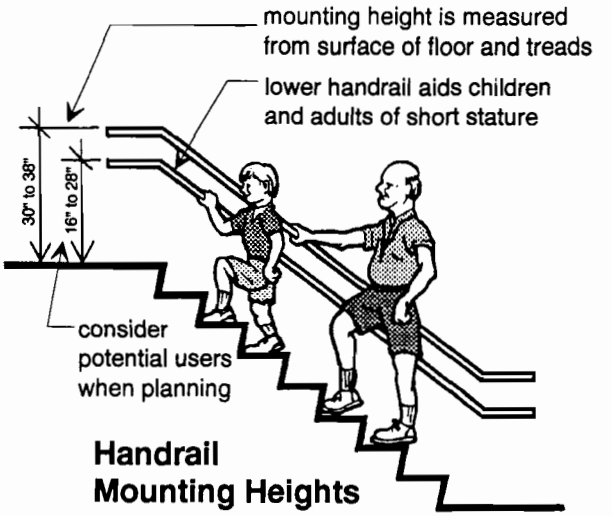

Handrail Mounting Heights

Location: It may be desirable to place handrails along both sides of a stairway to provide user choice and flexibility. Some people can comfortably use only the right or left hand to grasp the rail. Others may require support the rail offers on a specific side.

Handrail Design: Round or oval smoothly-shaped handrails 1-1/4 inches to 2 inches in diameter are easy to grip and relatively inexpensive. However, some say these are too small for adequate leaning support and prefer more traditional cross-sections. Consider placing the railings 1-1/2 inches from the wall to allow space for the knuckles of the gripping hand, but not sufficient room to wedge an arm during a fall. Handrails should offer a continuous gripping surface with interruptions caused by newel posts, pickets, or other similar features avoided except where required for structural support or by other code provisions.

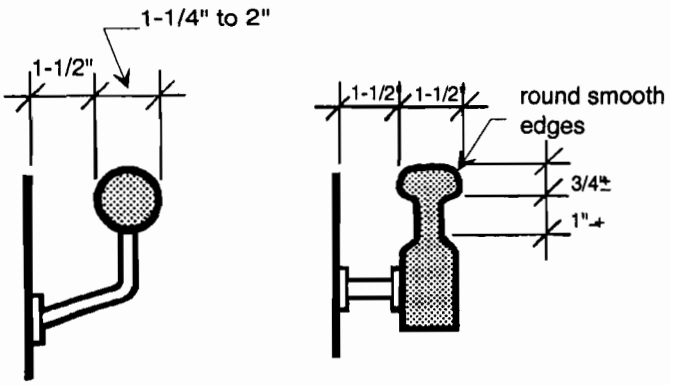

Handrail Shapes

Horizontal Extensions: Level extensions to stair handrails at the top and bottom of the stair run provide added support and guidance especially for people with balance or mobility limitations, or visual impairments.

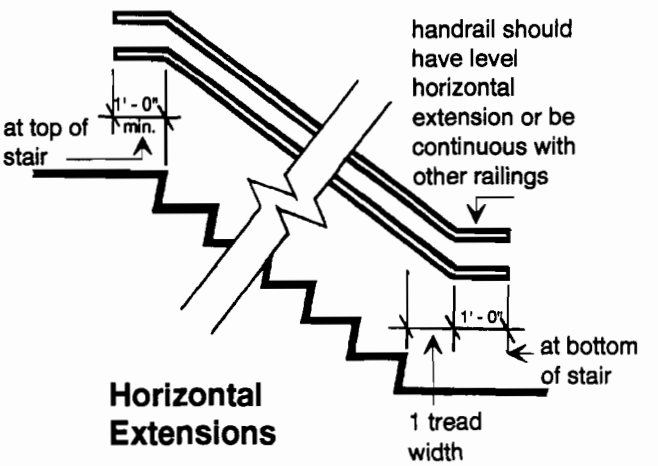

Horizontal Extensions

3. Drop-offs

Edge Protection: Unprotected drop-offs along stairs and landings are a potential hazard for everyone, especially people with visual or mobility impairments. Half-walls, balustrades, or other barriers are appropriate. State and local codes regulate these items extensively.

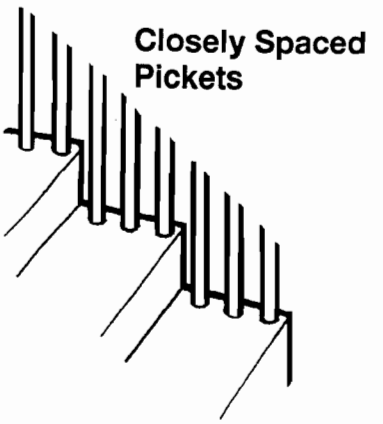

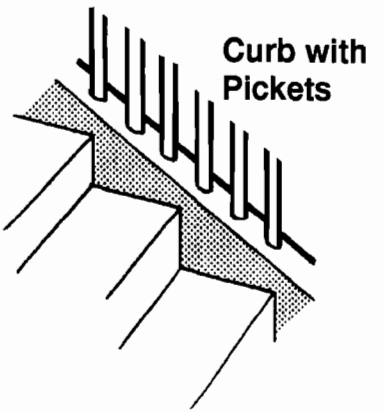

Examples of Edge Protection

Additional Changes to Meet Temporary or Individual Needs

- **Install temporary lift.**
- **Install abrasive strips** on slippery stair treads.
- **Install wood bevels** under extended nosings on stair treads.
- **Paint treads and risers** contrasting colors.

Replacing or Installing Entire Stairs

Although not everyone can use stairs, certain features improve their use for a wider range of people. Some people with balance limitations may actually have an easier time using stairs than ramps. Accessibility guidelines and standards listed in *Appendix A* acknowledge this need and provide specifications for accessible stair design. These specifications offer useful guidance when replacing old or installing new stairs.

However, stair design is only one part of the larger issue of how best to achieve full access between floor levels. Consider including additional floor space at the landing levels to accommodate installation of a platform or chair lift in the future. Some residents may find a need for a residential elevator. If storage spaces that stack between floor levels are being remodeled consider sizing and structurally reinforcing them to accommodate installation of a residential elevator in the future. For more information on these and other possible design approaches, refer to the design manuals and publications listed in *Appendix B*.

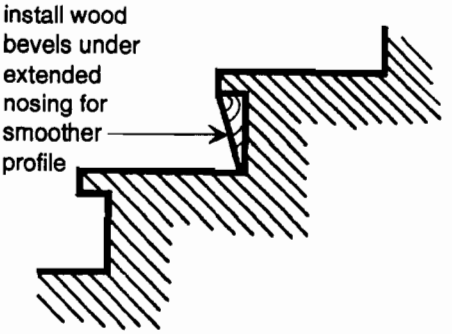

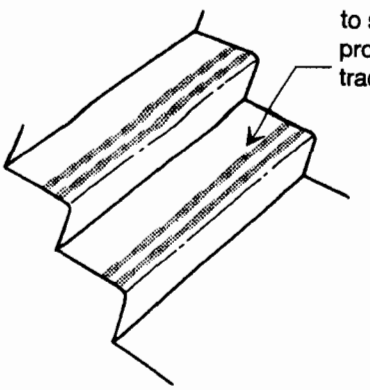

WINDOWS

Single- and Double-Hung Windows

Sliding Windows

Casement Windows

Awning Windows

Additional Changes to Meet Temporary or Individual Needs

Accessible Windows

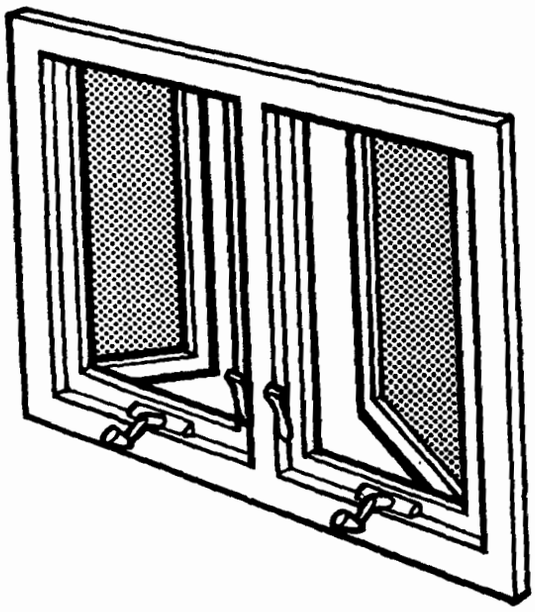

Windows

1. Single- and Double-Hung Windows

Replacement: Many people have difficulty opening and closing single- and double-hung windows due to the physical strength and reach required. When replacing windows, consider installing models that are easier to operate, such as sliders, casements, or awning windows described below. However, size and structural constraints sometimes make it difficult to change window type. If single- and double-hung windows must be used, select high quality models with well designed handles and locks. Higher grade models with good counter balances have less tendency to stick and jam in their tracks, making them easier to use.

Another solution if single- or double-hung windows must be used is installation near the sill of a lifting mechanism with a hand crank and latch that requires little force to operate and is within easy reach. This mechanism should be installed by a professional remodeler to meet the special needs of a client.

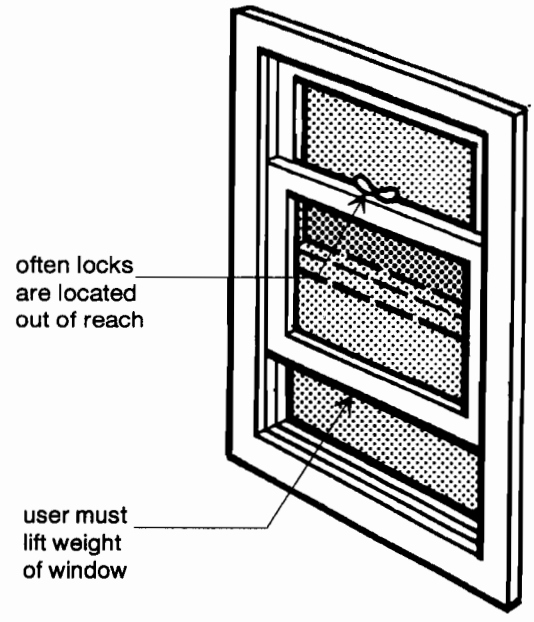

Single- and Double-Hung Windows

2. Sliding Windows

Operation: Sliding windows are usable by many people for whom single- and double-hung windows are difficult. The user pulls or pushes the sliding window along a track. Depending on its distance from the floor, a slider can also be operated from a seated position. Again, higher grade models will have less tendency to stick and jam in their tracks.

Locks: Locks are usually located at the bottom of the frame of sliders, within reach of most people. Avoid models with small recessed locks. Also, select slider models with loop, lever, or blade handles. Slot handles are difficult for people with limited gripping ability and finger strength.

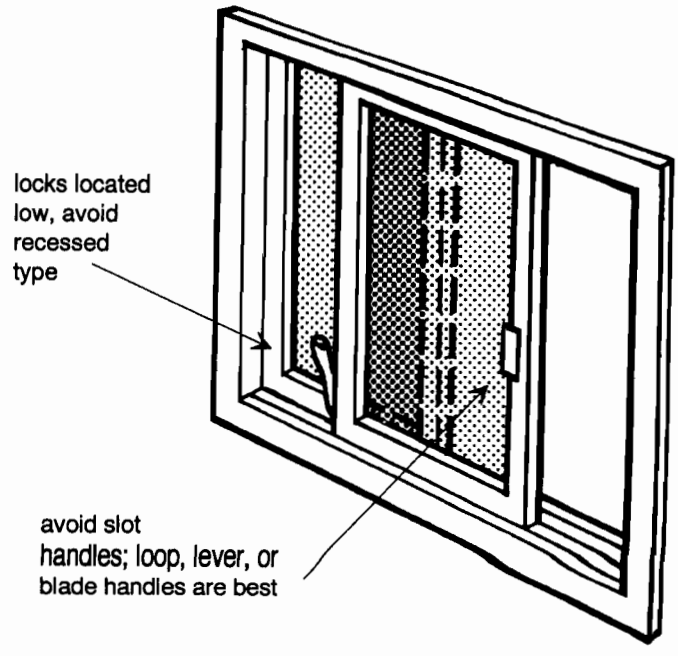

Sliding Window

3. Casement Windows

Operation: Casement windows are typically the easiest for most people to use and offer one of the best replacement choices. They are operated by turning a hand crack located at the window sill within easy reach. Models with large easy-to-grip cranks are preferable.

Locks: Locks on most casement windows are located close to the sill. An additional lock may be located at the top of some large units. Many manufacturers offer special adapters to operate these upper locks from a seated position.

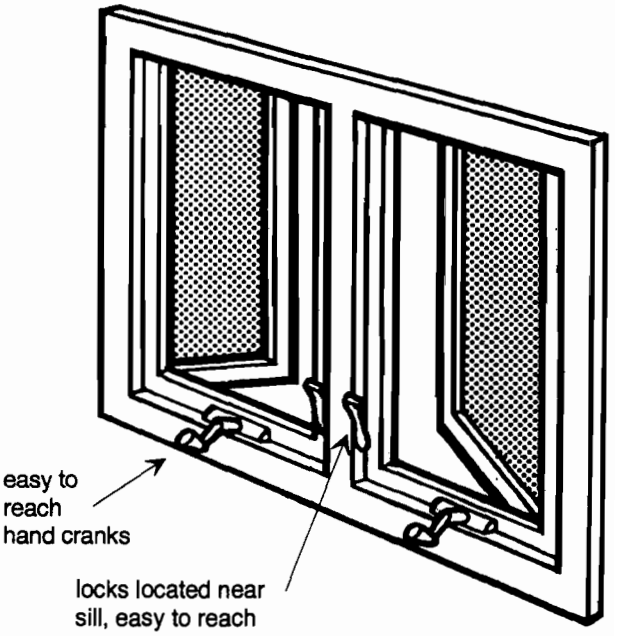

Casement Window

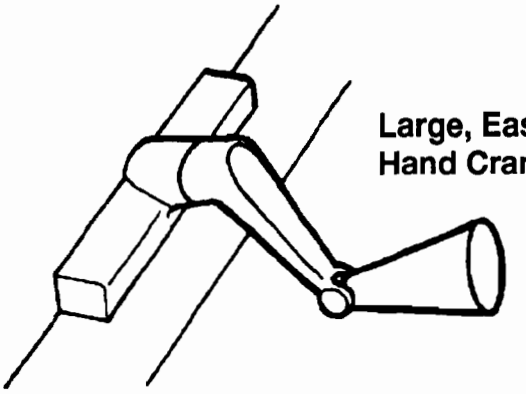

Large, Easy-to-Use Hand Crank

4. Awning Windows

Operation: Like casement windows, awning windows are easy to use and are a good replacement option. They are operated by a hand crank on the sill, within reach of most people. Models with large, easy-to-grip cranks are most satisfactory.

Locks: The locking mechanism on an awning window is part of the crank handle, allowing the lock to disengage or engage as the window is opened or closed. The combined operating and locking mechanism is convenient for everyone.

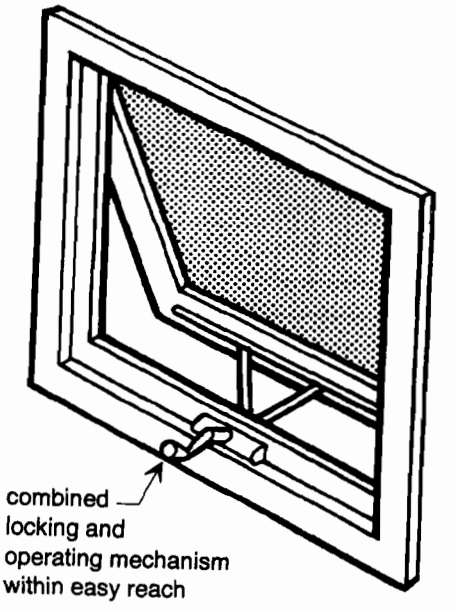

Awning Window

Additional Changes to Meet Temporary or Individual Needs

- **Install auxiliary loop handles** to assist in lifting and sliding windows.
- **Install custom-made window inserts** in single- and double-hung windows. Be careful to maintain clear opening required by code.
- **Use lock adapters** on large casement windows with upper locks.
- **Install power operators**.

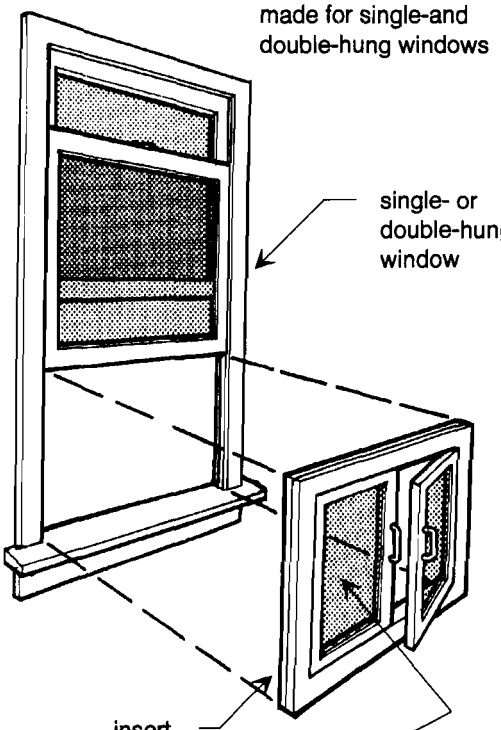

Accessible Windows

Windows need to be appropriately located to be fully accessible. For example, an accessible window needs to be mounted so that all handles, locks, and/or power controls can be reached from a seated position. Adequate clear floor space needs to be provided to position a wheelchair. These requirements are best addressed when adding new windows or undertaking a complete home renovation. The standards listed in *Appendix A* do not provide minimum specifications for accessible windows as for other building elements, but sections on controls and reach ranges offer suggestions on location and use. Other publications listed in *Appendix B* include examples of universally usable windows.

INTERIOR FLOOR SURFACES

Carpet

Non-Skid and Slip-Resistant Surfaces

Small Level Changes

Ramp Surfaces

Grill and Grates

Additional Changes to Meet Temporary or Individual Needs

Floor Surfaces in Additions and Complete Renovations

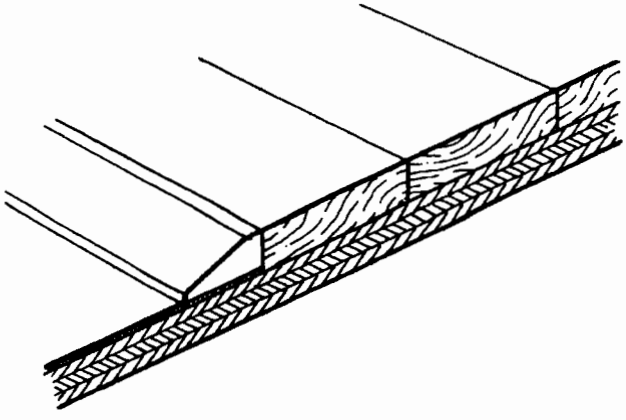

Interior Floor Surfaces

1. Carpet Replacement

Carpet Type: Select carpeting that is dense and tightly woven. Thick soft carpets typically impede the wheels of wheelchairs, canes, baby strollers, and walkers, requiring extra effort by many individuals with diminished arm and/or leg strength. The new carpet should have a level or textured loop, or a level cut or level cut/uncut pile texture with a maximum pile thickness of 1/2-inch. Although it is best to install carpet without using a pad, if cushioning of any type is used it should be firm. This is true with interior or exterior carpet.

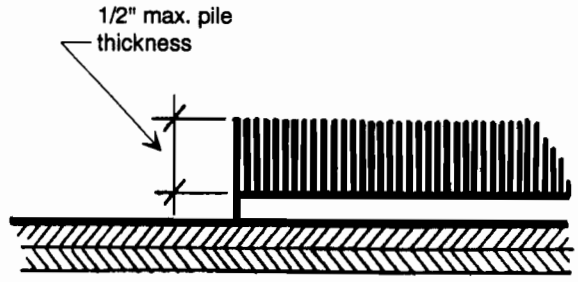

Carpet Pile Thickness

Carpet Edges: It is generally best for carpet edges to be securely attached without any exposed areas. Trim used to fasten carpet edges to the floor should provide a smooth transition with a slope no greater than 1:2.

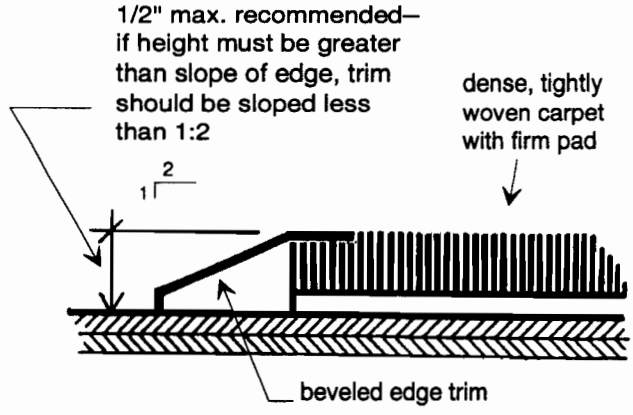

Carpet Edges

2. Non-Skid and Slip-Resistant Surfaces

General: When replacing "hard" surfaces such as vinyl, rubber, tile, wood, concrete, or masonry, consider using new materials or finishes that are stable, firm, and slip-resistant. Flooring labeled "non-skid" surface helps provide enough friction to keep shoe heels, crutch tips, and the wheels of mobility devices and moving carts in position.

Tile: Some varieties of tile on the market have an abrasive texture designed to be slip-resistant. Ideally the texture should offer enough resistance to provide adequate traction but not be so rough as to scrape exposed skin. This is particularly important in bathrooms where wet floors can pose slipping problems for people with poor balance.

Vinyl: Many types of vinyl flooring are now available with non-skid surfaces for improved traction.

Concrete: Steel trowel finishes can be very slippery, especially when wet. In most cases a broom finish will improve traction. Sometimes, however, troweling is required for sanitary reasons.

3. Small Level Changes

General: Provide for a smooth transition between areas with different floor materials. Small, abrupt changes in floor levels are potentially hazardous, especially for the elderly, people with vision impairments, and those who use canes, walkers, or other mobility devices. Further, people using wheelchairs may find it difficult to reasonably negotiate vertical changes greater than 1/4-inch. Level changes up to 1/2-inch can be crossed with a surface sloped at a 1:2 rise. Changes greater than 1/2-inch will require a gently sloping surface with a maximum rise of 1:20 or a ramp.

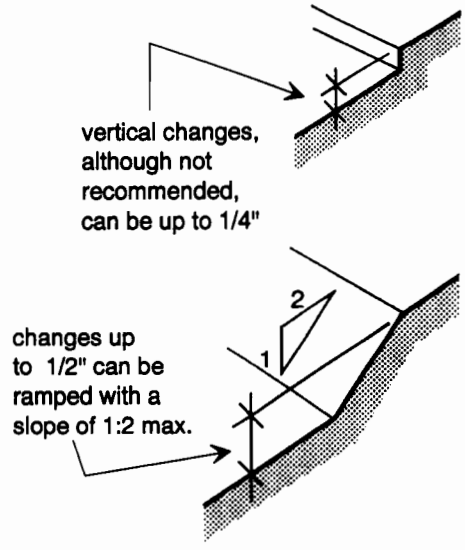

Small Level Changes

Bevels: Small vertical level changes created when a floor is replaced or refinished should be corrected. Small bevels or similar sloped surfaces can be installed to create a smooth transition between these different floor surface levels or room levels as needed.

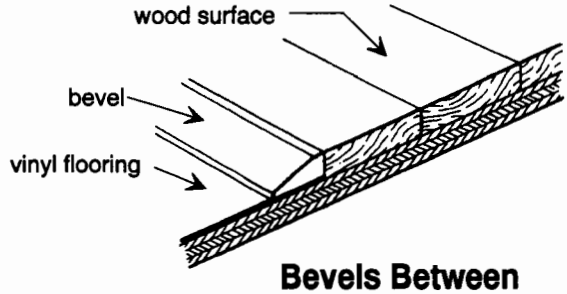

Bevels Between Floor Levels

Raising Floor Level: Another method to reduce small level changes between floor surfaces is to install the new surfaces at the same level. This may require changing the type of material and/or its thickness to achieve a level transition.

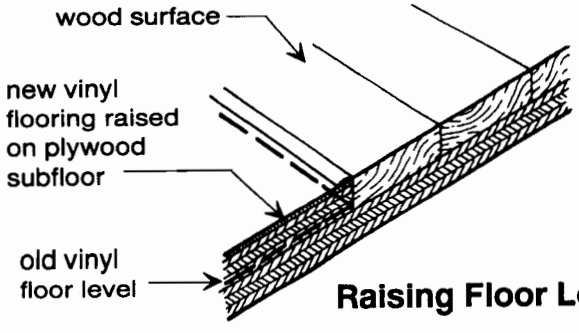

Raising Floor Level

4. Ramp Surface Replacement

General: Slick ramp surfaces provide poor traction, especially when wet, causing people to slip and mobility devices to slip and spin wheels. However, the ramp surface often receives little attention by the designer or installer. When replacing a ramp or modifying the surface of an existing ramp, choose a stable, firm, slip-resistant material. It is best to avoid carpet, but if it must be used, select a dense, short pile, tightly woven material. Tightly stretch or glue-apply the material over a thin pad or preferably no pad at all.

5. Grill and Grate Replacement

Openings: When replacing grills or grates, use those with openings of 1/2-inch maximum in the direction of travel. Large openings can catch ends of crutches and canes or even shoe tips and small kids' toes. The wheels of mobility aids, strollers, and carts may also become stuck in such openings causing them to jam or tip over. Rectangular openings perpendicular to the direction of travel can be greater than 1/2-inch.

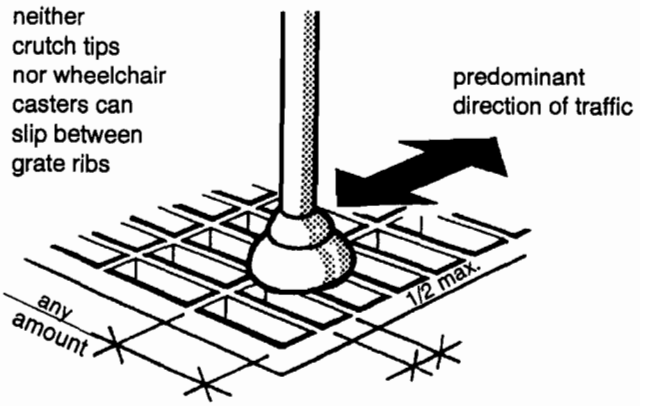

Grate Opening in Pedestrian Travel Direction

Additional Changes to Meet Temporary or Individual Needs

- **Install carpet edge strips** on existing rugs and carpets.
- **Coat back of throw rugs** with rubberizing liquid coatings.
- **Use rubber mats** in hallways or foyers with slippery surfaces.
- **Apply abrasive strips** to slippery ramp surfaces, stair treads, or step-ups.
- **Paint** slippery floor surfaces with appropriate commercial grade anti-skid coatings.
- **Install short surface ramps or bevels** at step-ups or small level changes between different floor surfaces.

Floor Surfaces in Additions and Complete Renovations

During complete renovation or construction of an addition to the home, floor surfaces can be improved to provide a higher level of accessibility and safety. When all the spaces in a residence are being renovated, modifications can be designed to provide an accessible route throughout the unit. Such a route is a necessity for total accessibility. While many of the suggestions in this section correct or improve small level changes, more costly features such as ramps, lifts, or elevators, may be required to overcome existing barriers caused by sunken rooms and partial or full floor level changes. The accessibility standards listed in *Appendix A* (which provide detailed specifications for accessible routes and for ground and floor surfaces) and the design manuals and publications in *Appendix B* provide guidance and illustrations on these subjects.

CONTROLS AND SIGNALS

Light Switches

Electrical Outlets

Thermostats

Alarms

Security Systems

Total Environmental Control Systems

Additional Changes to Meet Temporary or Individual Needs

Accessible Controls

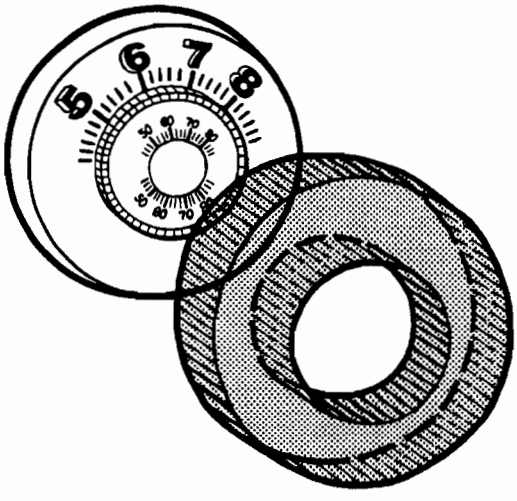

Controls and Signals

1. Light Switch Addition or Replacement

Type of Switch: When replacing or adding light switches, select new models that can be operated by a single touch using little force. Easy to use types include toggle, rocker, and touch sensitive electronic switches. Avoid switches that require tight pinching, gripping, twisting, or fine finger manipulation.

Dimmer Switches: These switches also should be easy to use. Touch sensitive electronic dimmer switches are an excellent choice as they do not require the twisting motion of most traditional knob switches. However, knob switches with blade or lever extensions are an improvement and will work well for many people. Slide bar dimmers also are acceptable.

Mounting Height: When adding or relocating a switch, try to mount between 36 inches and 48 inches above the floor surface. Switches at these heights can be reached by most people. Switches installed over a counter or work-top should be mounted close to the surface. This will help people who are seated, individuals who use canes or walkers for support, and children to reach the switch.

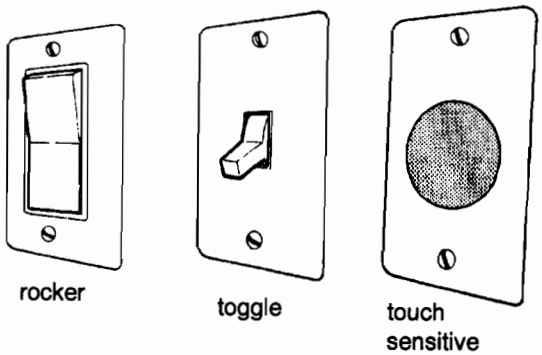

Easy-to-Use Switches

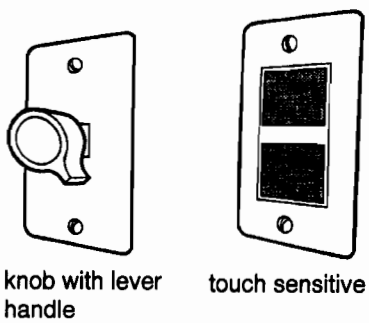

Dimmer Switches

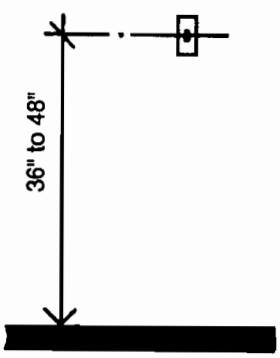

Mounting Height for Light Switches

2. Electrical Outlet Addition or Replacement

Mounting Height: When adding or relocating an outlet, try to mount no lower than 15 inches above the floor surface. Outlets at this height and above are easier for people who have trouble bending and stooping to use. When locating outlets over a counter or work-top, try to mount close to the surface to help people who are seated, those who have limited reach, and those who use canes, walkers, or crutches to reach the outlet.

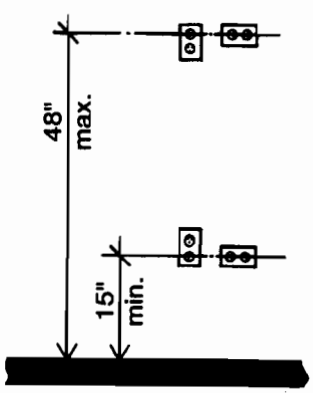

Mounting Height for Electrical Outlets

Number: During electrical and renovation work, consider adding additional outlets. As well as meeting the increasing demands of home electronic equipment such as stereos and computers, they are also helpful to many people with disabilities. Many disabling conditions require a person to use special equipment ranging from simple battery chargers to sophisticated breathing ventilators. The extra outlets provide options for location and use of such equipment without compromising the placement of more traditional items such as lamps, televisions, and clocks.

A quadraplex outlet could replace the typical duplex outlet and not only increase the number of outlets, but save on installation and wiring costs.

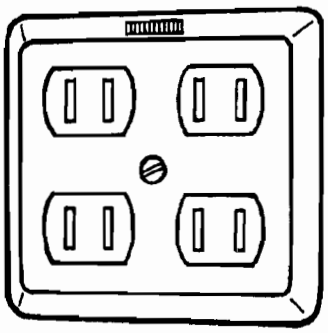

Add-On Quadraplex Outlet

Outlets Near Telephone Jacks: When possible during electrical and home remodeling projects, install electrical outlets near telephone jacks. Not only are they a convenience for answering machines, but are essential for text telephones. Text telephones, commonly referred to as TTY's or TDD's, allow people with hearing and speech impairments to send and receive typed messages over telephone lines.

3. Thermostat Replacement

Controls: When replacing a thermostat, select one with easy-to-use controls. Controls move effortlessly and require no tight pinching, gripping, twisting, or fine finger manipulation. Try to avoid selection of models which require controls to be finely tuned to achieve a specific temperature. These are difficult for people with limited hand dexterity or vision impairments to use.

Some new thermostat models emit a sound to indicate every few degree changes as temperature controls are moved, an especially helpful feature for people with visual impairments.

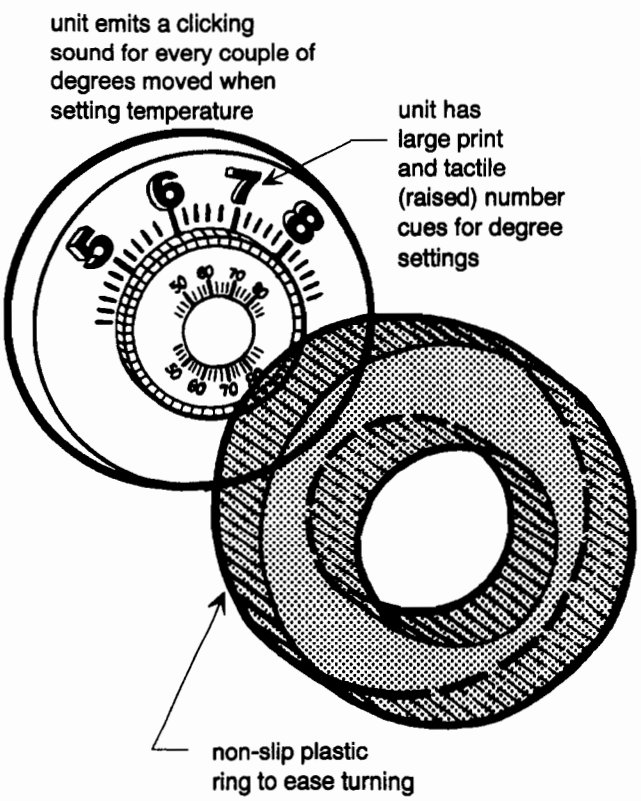

Easy-to-Use Thermostat

Replacement Type/Numbers: Thermostats with large, high contrast, easy-to-read numbers are available and should be considered. Easy-to-read instructions are also helpful.

Mounting Height: Try to mount the thermostat 48 inches maximum above a floor surface so it can be reached by most people.

4. Alarms

Strobes: Out-dated or unreliable fire and/or smoke alarms may be replaced by new models with strobe lights. The intense flashing lights serve as a critical warning for everyone, especially those who are hearing impaired. Locate the alarms with strobes in areas with maximum visibility. Take special care in selection of the alarm, as the frequency of the flash of some strobes can cause seizures in those sensitive to them.

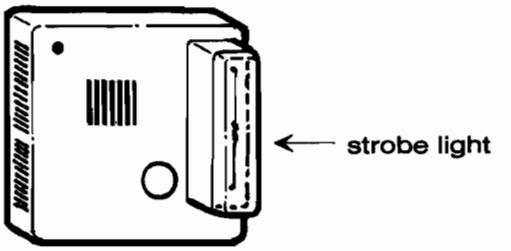

Alarm with Visual and Audible Components

Auxiliary Alarms: Many people who cannot hear audible signals use auxiliary vibrating or strobe alarms in sleeping rooms. These alarms typically plug into standard electrical outlets and are triggered by the sound of the main fire alarm. During electrical or renovation work, additional outlets may be installed to accommodate the possible need for alarms in all sleeping areas of the home.

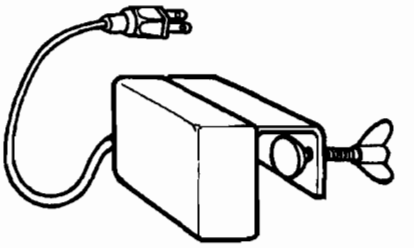

Mechanical Vibrator Alarm

5. Security Systems

Controls: When replacing or installing a new security system, select a model with an easy to operate key pad. The buttons should be high contrast and raised, and require little force to activate. Avoid monochromatic control key pads with flush controls as they are difficult for some people to operate.

Instructions: Select control panels and key pads with large, high contrast, easy-to-read numbers and instructions. If possible, letters and numbers can also be raised to allow people with vision impairments to locate the desired button by touch.

In addition to the controls, instructions or information displayed on digital screens is available in high contrast, simple type faces.

Mounting Height: When a control unit is to be permanently installed in one location, try to mount it no higher than 48 inches above a floor surface. Controls at or below this height can be reached by most people.

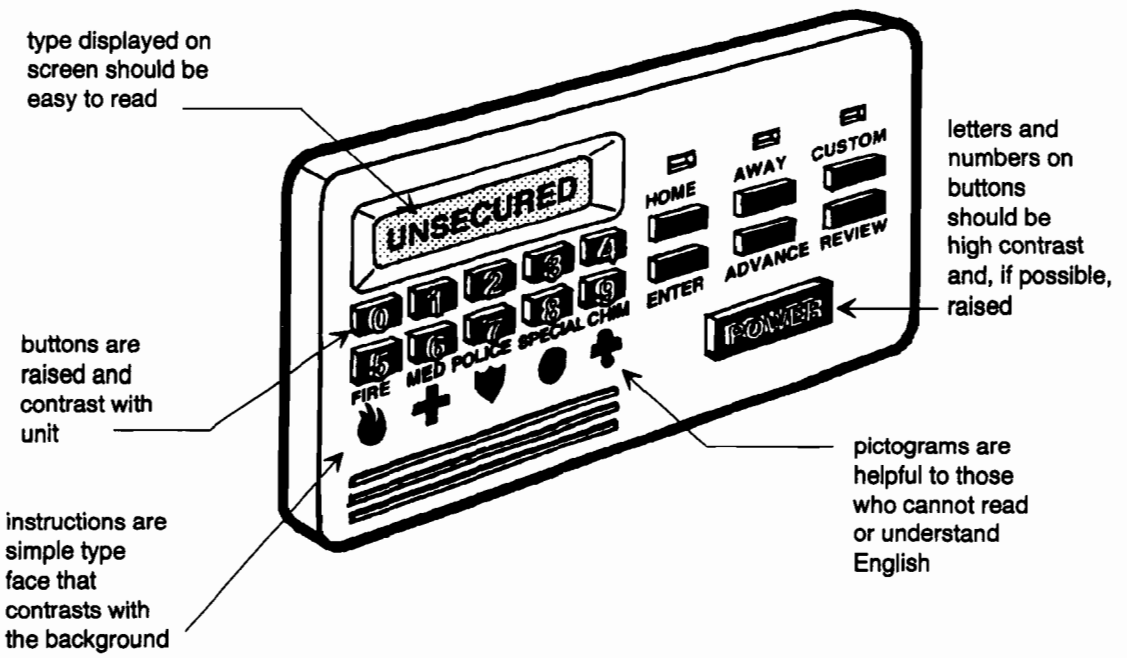

Security System Control Unit

6. Remote Controls, Home Automation, and Total Environmental Control Systems

General: Rather than lower or relocate light switches, it may be possible to install one of the many remote control systems available at building and electrical stores.

Simple inexpensive remote control systems contain modules that allow users to control lights and/or small appliances from a small keypad or button that can be hand-held, carried in a pocket, or located anywhere.

There are three common types of remote control systems: one sends signals through existing home wiring; a second is wireless and uses radio signals; and the third requires additional wiring. Modules for the wireless systems and those that use existing wiring can be simply plugged into existing electrical receptacles or installed out of sight inside existing receptacle and light switch electrical boxes.

Simple systems can be installed to control just one light or many. More elaborate systems can add convenient control of other functions such as temperature and alarms.

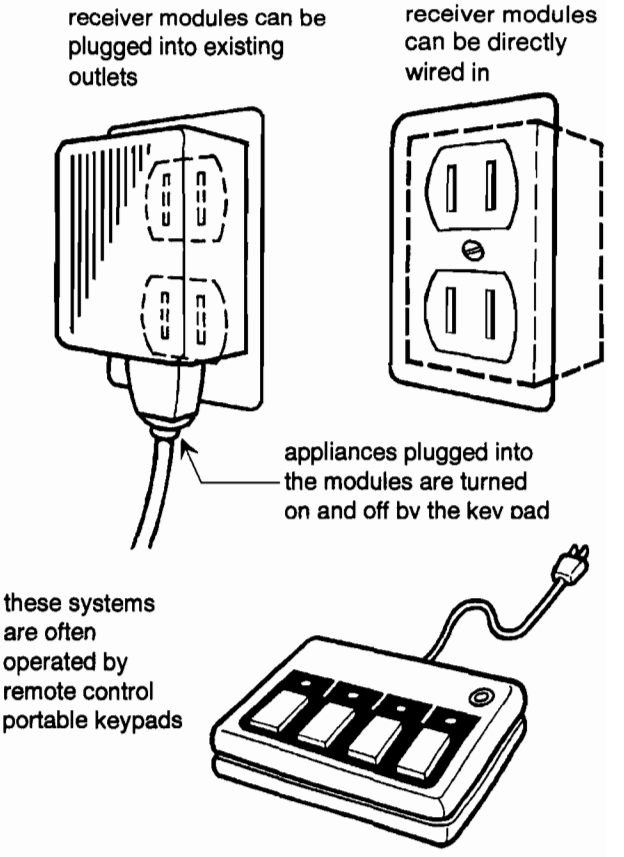

Transmission Through House Wiring

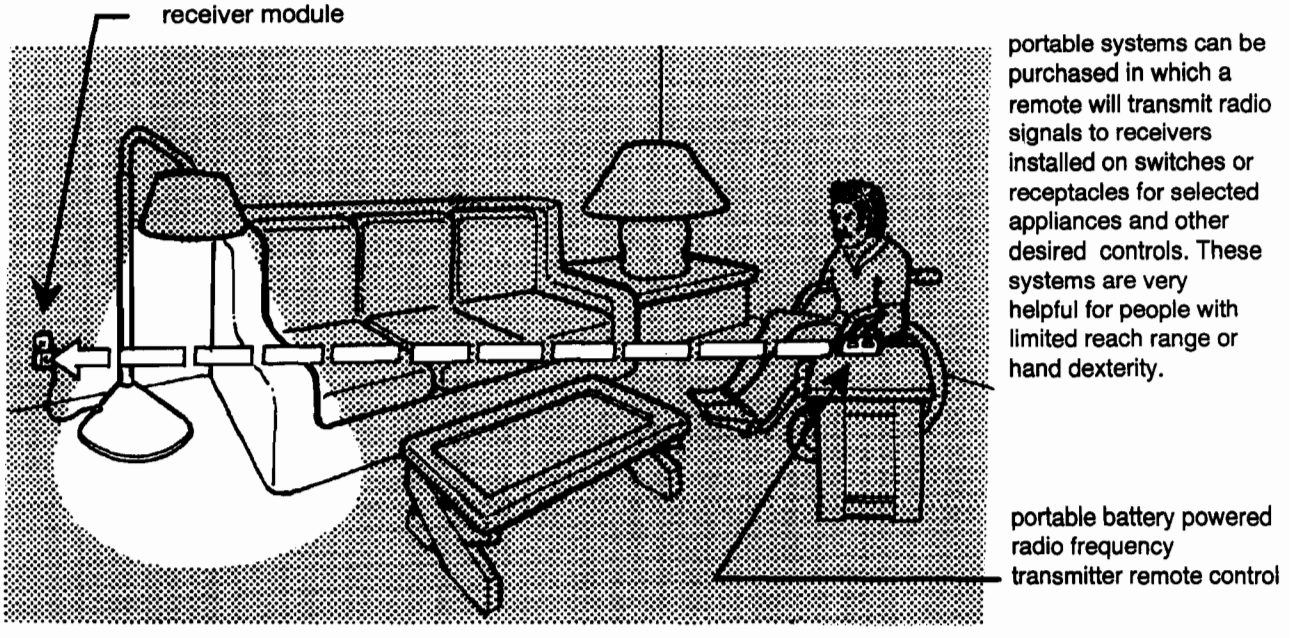

"Total environmental" control systems are available that combine all of the environmental controls such as lighting and temperature into one central control panel or remote unit from which everything is operated. It is even possible to integrate some control units with security and emergency systems and link up to personal computers to expand capabilities.

These systems offer unique opportunities for universal design—a single control unit can be used to operate most household controls regardless of location or function.

Additional Changes to Meet Temporary or Individual Needs

- **Use strip receptacles** to increase number of electrical outlets and improve location.
- **Use extensions or pull cords** on existing high control switches.
- **Use portable strobe alarm** which can be plugged into a standard outlet.
- **Use remote controls** to operate lights and appliances in difficult to reach locations.

Accessible Controls

In a truly accessible home controls must be located where there is enough floor space available for people using wheelchairs and other mobility devices to reach them. The best time to move outlets, switches, and other environmental controls from awkward and inaccessible locations and/or replace them with models that are accessible and easy to operate is when designing an addition to the home or planning a total home renovation project. This is also the time to redo fire alarms and security systems to improve home safety for all. For greatest usability, alarms should have both an audible and visual signal. The major accessibility standards listed in *Appendix A* provide specifications for controls and alarms. *Appendix B* lists additional helpful publications.

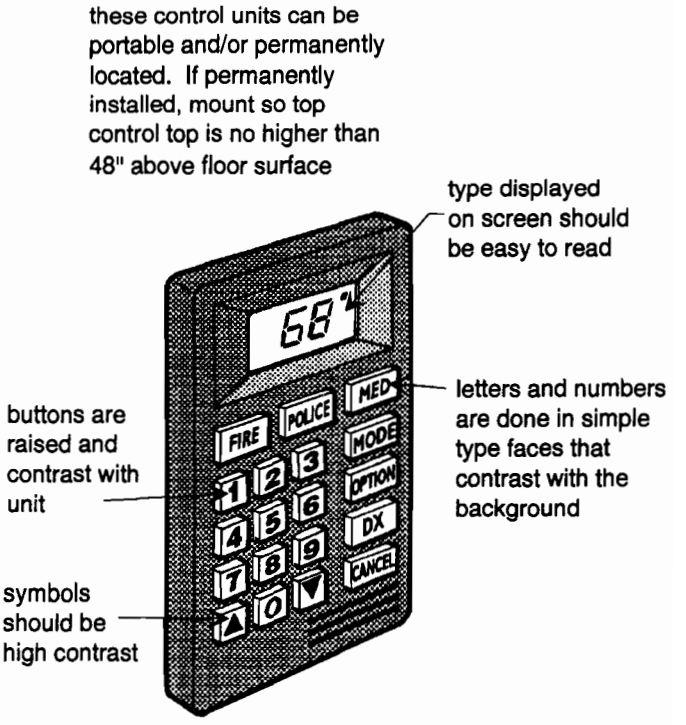

Hardwired Control Unit

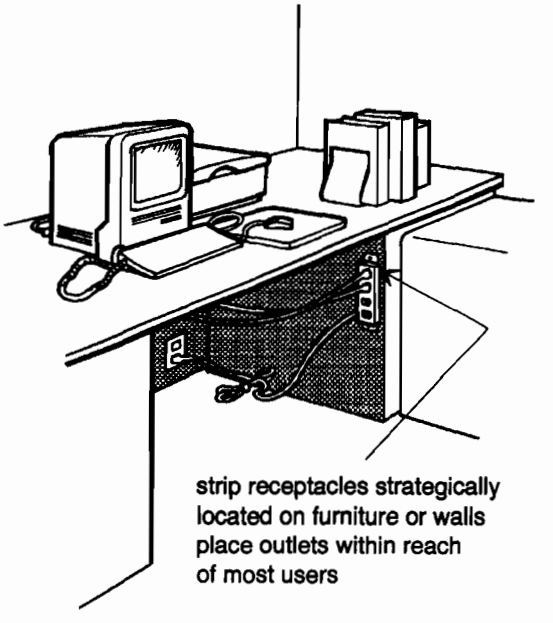

Strip Receptacle

DECKS AND PATIOS

Common **B**arriers on **D**ecks and **P**atios

Remodeled **D**eck and **P**atio

Drop-offs

Steps/**S**tairs

Surfaces

Lighting

Entrance **D**oors

Additional **C**hanges to **M**eet **T**emporary or **I**ndividual **N**eeds

Replacing or **I**nstalling **E**ntire **D**ecks and **P**atios

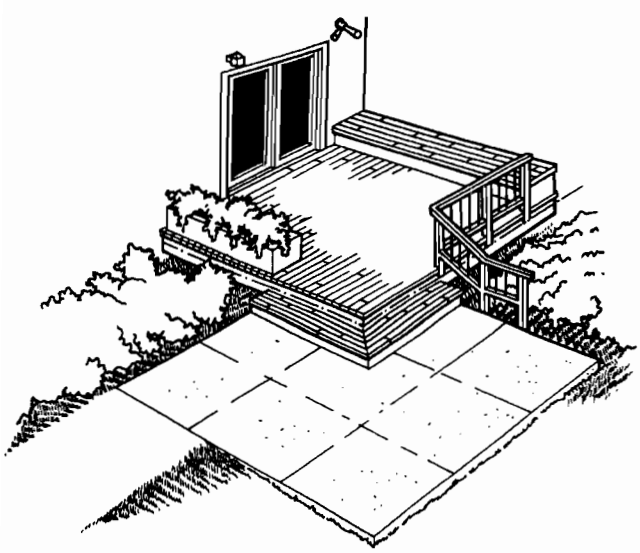

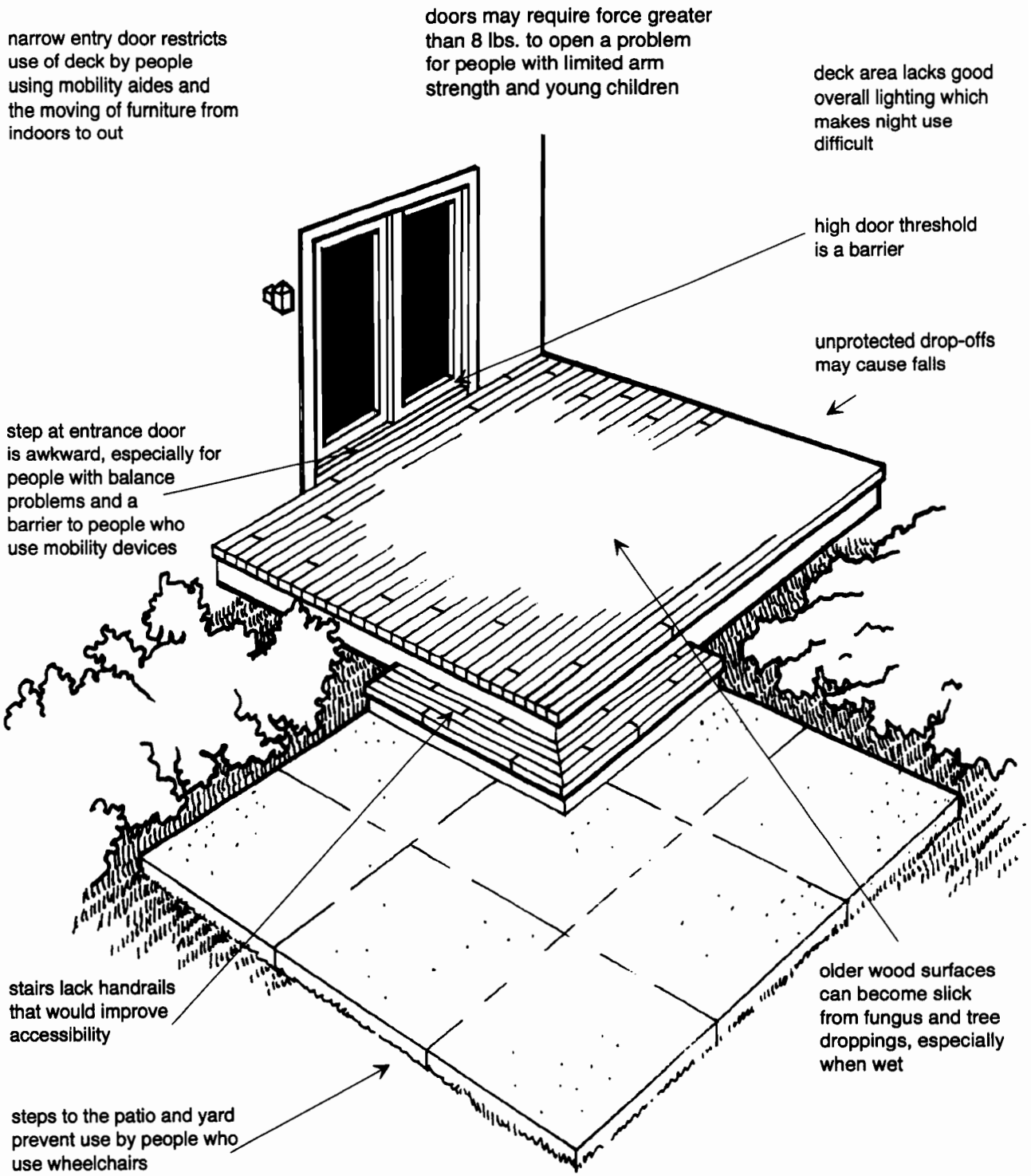

Common Barriers on Decks and Patios

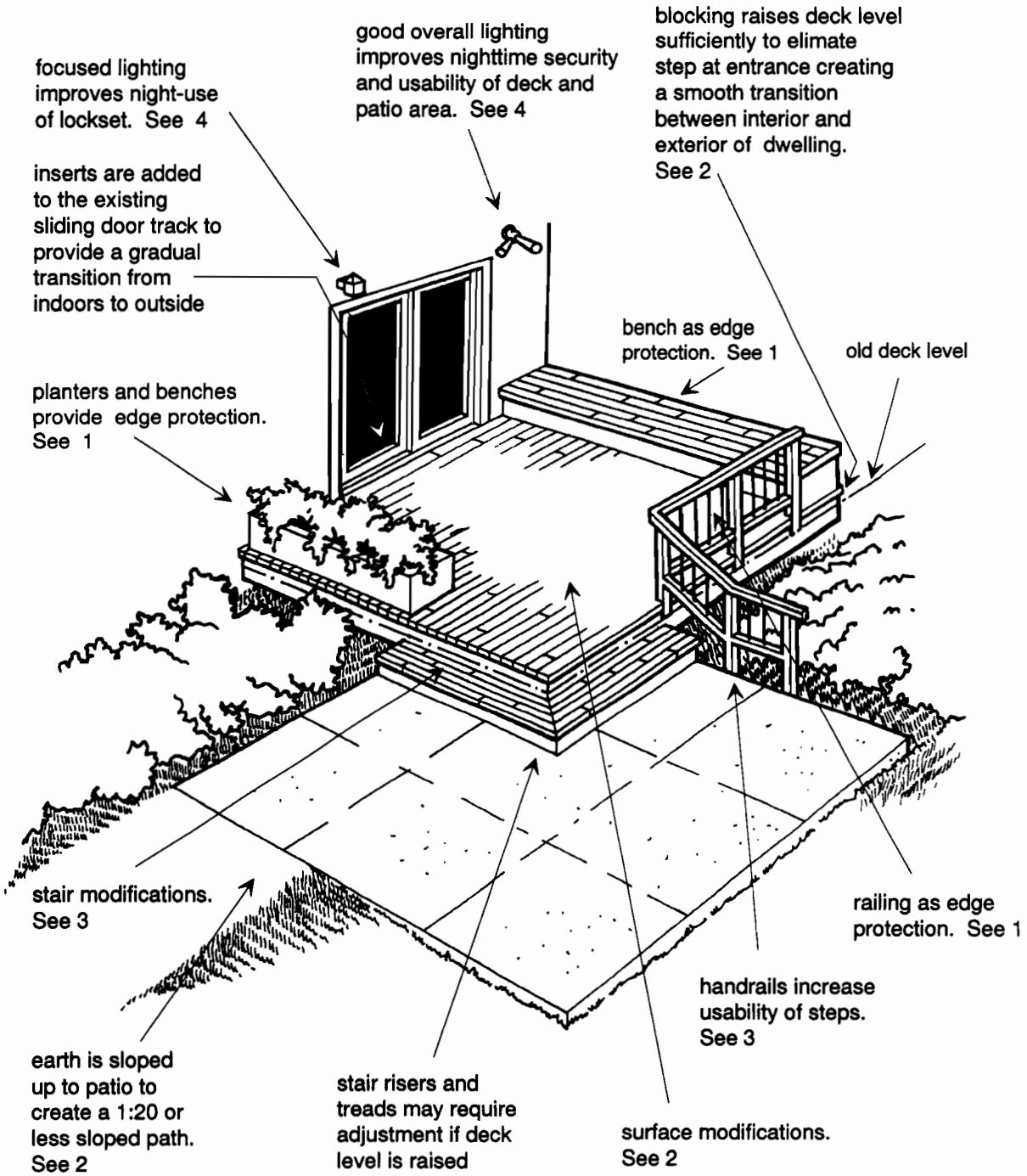

Remodeled Deck and Patio

Decks and Patios

1. Drop-offs

General: Consider using curbs, rails, planters, or seats to protect the edges of the deck. Above-grade patio edges could be filled with soil at key locations to increase accessibility to the lawn. See *Remodeled Deck and Patio overview* on previous page and *Entrances: Drop-offs* for details.

2. Steps/Stairs Replacement

General: Comfort on the stairs from deck to patio is improved by the addition of handrails with horizontal extensions. If adding or replacing stairs, consider using those with rounded nosings on the treads and closed risers. See *Interior Stairs,* and *Entrances* for details.

3. Surface Repair and Replacement

Wood Decking: When replacing old decking consider installing blocking over the existing joists to raise the new decking surface to a level within 1/2-inch of the interior floor level. This will create a gradual smooth transition between inside and outside of the home and eliminate uneven surfaces.

Concrete or Masonry Repair: A good time to try to eliminate all cracks or small drop-offs is when broken or worn concrete or masonry patios are being repaired. See *Interior Floor Surfaces* for further guidance.

- **Raise level:** When replacing a concrete or masonry patio surface, consider raising its floor level to 1/2-inch or less of the interior floor level to create easier access.

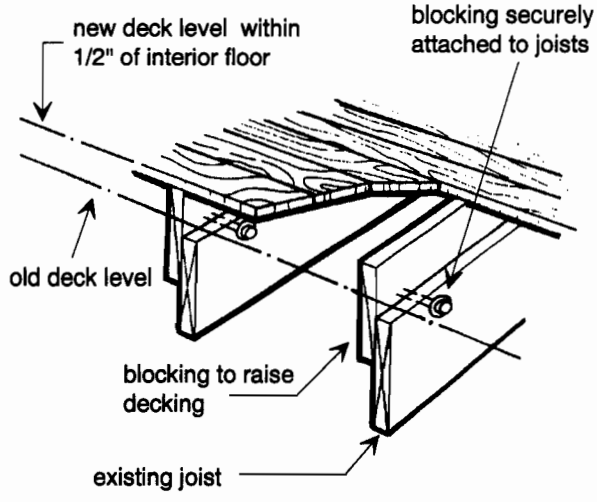

Blocking to Raise Deck Level

- **Waterproofing:** When raising the patio level close to floor level you will want to follow common waterproofing practices to prevent water infiltration. These include:

  - assuring positive surface slope away from the building;
  - installing continuous metal or plastic water bars in joints and under thresholds;
  - using adequate interlocking weather stripping;
  - caulking appropriately at all exposed joints;
  - installing drains and weep holes as appropriate; and,
  - assuring adequate protection from snow build-up.

Canopies, roofs, or other forms of weather protection over the patio doors also help prevent leaking inside of the home.

- **Ramp to Site:** When a concrete or masonry patio surface requires replacement, it may be possible to ramp part of the new surface down to grade. This will create a convenient path from deck or patio to the lawn and eliminate the need for steps. The slope surface should not exceed 1:12, and 1:20 or less is recommended. Ramps between 1:20 and 1:12 need handrails. (Check local codes.)

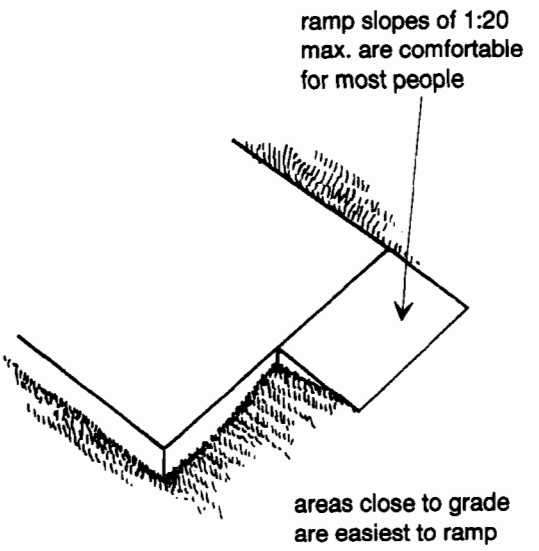

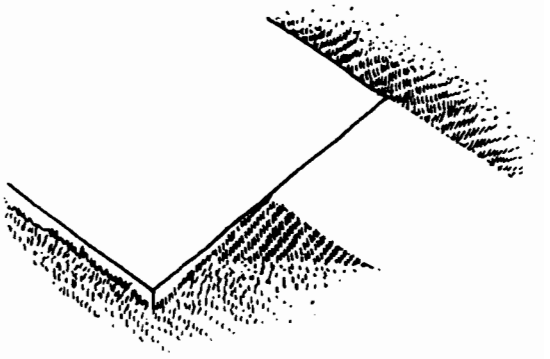

earth landscaped to patio for smooth transition

4. Lighting

General: Night-time use of decks and patios is enhanced by well-planned overall lighting. Additional lights may also be desirable to focus on locksets or security systems. See *Entrances* for more details.

Lighting at Stairs and Level Changes: When electrical work is being undertaken in the patio/deck area, consider installing additional lighting for the steps.

5. Entrance Doors

See *Doors* for details.

Additional Changes to Meet Temporary or Individual Needs

- **Install temporary ramp.**
- **Use railings, benches, or planters** to provide partial edge protection.
- **Install abrasive strips** on slippery stair treads.
- **Install awning** for weather protection.
- **Install short ramps or bevels** at step-ups or small level changes.

Replacing or Installing Entire Decks and Patios

A universally usable dwelling has exterior as well as interior spaces that are accessible to all people. Adding a new deck or patio, or completely renovating an existing one is an opportunity to improve accessibility. Perhaps the most important issue to consider is the relationship of interior and exterior floor levels. Ideally, the deck or patio surface should be set within 1/2-inch or less of the interior floor to allow a gradual land transition between inside and out. With careful waterproofing and weather protection this can be achieved. The accessibility standards and guidelines listed in *Appendix A* offer guidance for creating an accessible deck or patio, including specifications for railings, entry doors, stairs, ramps, and lifts. Design manuals and other publications listed in *Appendix B* will also be helpful.

PARKING AND WALKS

Parking Areas

Walkways

Additional Changes to Meet Temporary or Individual Needs

Accessible Parking and Site Paths

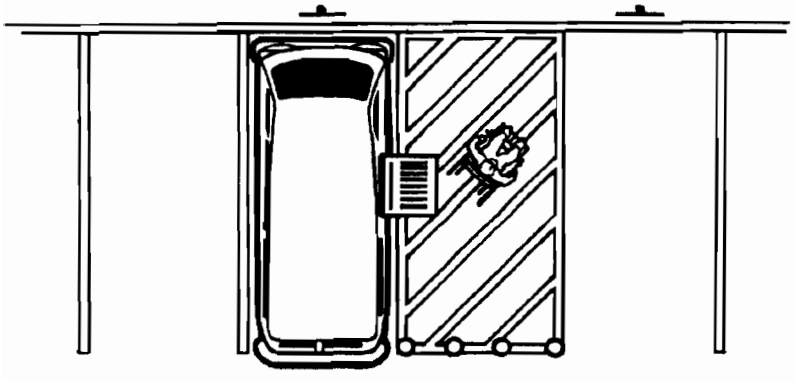

Parking and Walks

1. Parking Repair and Resurfacing

Access Aisles: The main feature that distinguishes an accessible space from a conventional one is an access aisle. Access aisles, used mainly on parking lots, are designated level areas of pavement or other hard compact slip-resistant surfaces next to the parking space with enough space for a person to transfer from a car to a wheelchair or maneuver off a van lift. When restriping spaces on a parking lot or adding new parking spaces, accessible spaces can be incorporated.

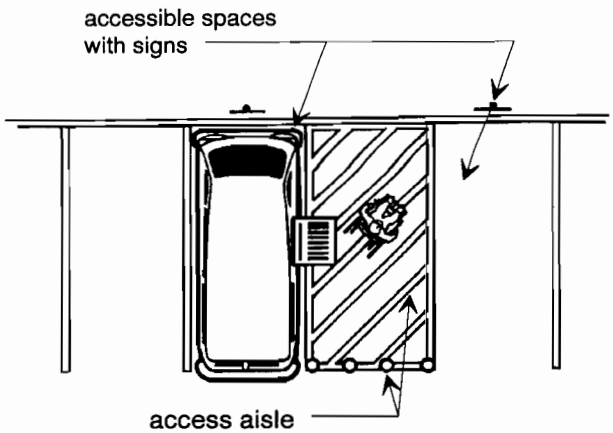

Access Aisle

When replacing, repairing, or adding new sidewalks that lead to dirt or gravel parking spaces or lots, consider adding additional paved strips along the edge of a parking space to provide a stable surface for transferring to and from vehicles. The paved strip is convenient for everyone, especially in bad weather, and will provide a secure arrival/departure spot for those with poor balance or mobility impairments.

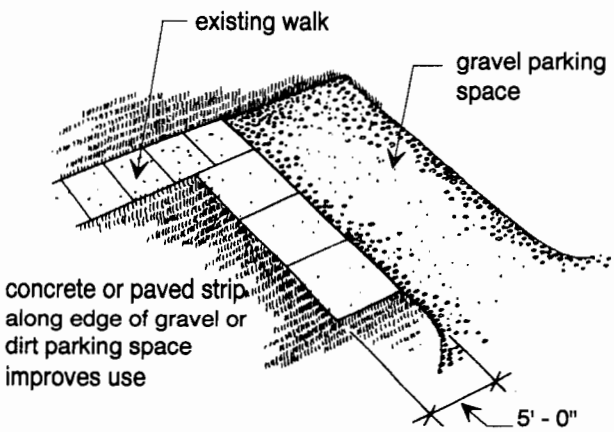

Boarding Surface at Gravel or Dirt Parking Space

Curb Ramps: Although beyond the scope of most home remodeling projects, consider installing curb ramps when resurfacing parking spaces or replacing walks connecting to parking areas. Curb ramps not only provide access for people with mobility impairments but also improve usability for those maneuvering strollers and moving carts.

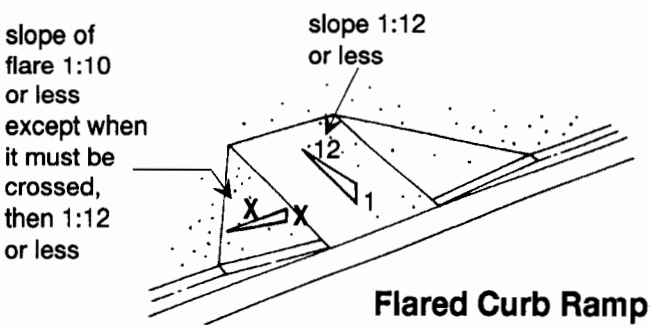

Flared Curb Ramp

Surface Slopes: When regrading or resurfacing parking spaces, make them as level as possible, while still allowing for needed drainage. More level parking reduces the likelihood of wheelchairs or baby strollers tipping over or rolling off course and is easier to negotiate for people with balance or mobility impairments.

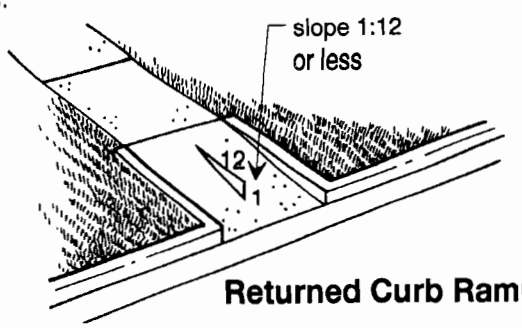

Returned Curb Ramp

2. Walk Repair and Replacement

Surface Texture: When planning exterior home projects, refurbish cracked concrete or asphalt paths, replace loose bricks, and repoint deteriorating mortar. An uneven walkway or path, or one with spaces larger than 1/2-inch between even surfaces is inappropriate for people who are unsteady on their feet.

When replacing walks, use materials or finishes that are stable, firm, and slip-resistant, and remain unchanged when exposed to weather, contaminants, or applied force. Select materials that provide enough friction to keep shoe heels, crutch tips, and the wheels of mobility devices from slipping.

Steel trowel concrete finishes become slippery, especially when wet, and are best avoided if possible. A broom finish will suffice in most cases. Asphalt and brick surfaces generally offer good traction but should not be so heavily textured to affect the movement of wheelchairs or strollers. As a general rule, gravel and dirt surfaces should be avoided.

Grill and Grate Openings: When replacing grills or grates, select models with no more than 1/2-inch openings in the direction of travel. Larger openings may cause wheeled devices and the tips of crutches and canes to stick and unbalance the user. Openings perpendicular to the direction of travel can be greater than 1/2-inch.

Small Level Changes: Smooth transitions are always best. Small abrupt vertical level changes typically occur when surface materials change, such as from asphalt to concrete or concrete to brick. Changes also arise as outdoor surfaces weather and become buckled or cracked.

Generally, people who walk with difficulty and those who use canes, walkers, or wheelchairs are easily tripped or thrown off-balance by any vertical change in level greater than 1/4-inch. Level changes up to 1/2-inch can be beveled with a surface sloped at a 1:2 rise. Changes greater than 1/2-inch require a gently sloping surface with a rise less than 1:20 or a ramp at a

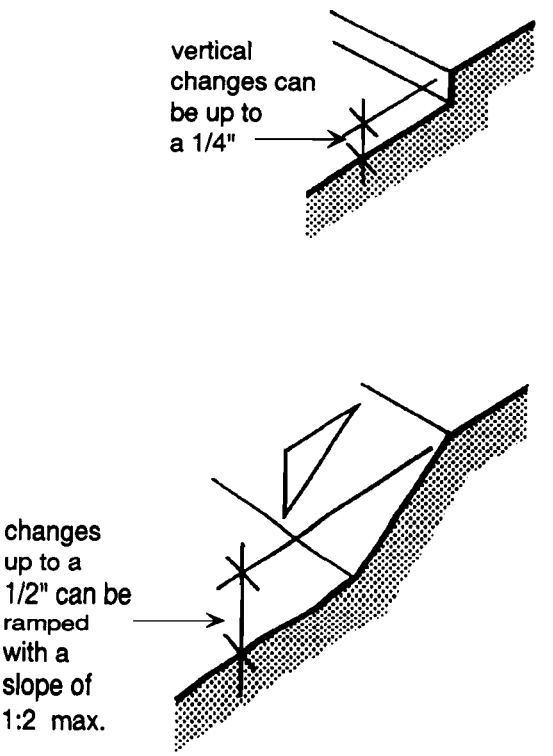

Small Vertical Changes

maximum slope of 1:12. All small vertical level changes should be corrected when walks are being repaired or replaced. Small bevels or similar sloped surfaces can be used to create smooth· transitions between different walk surfaces or at expansion joints as needed.

Drop-offs: Where unprotected drop-offs exist along the edge of walks consider providing edge protection, such as areas of gently sloping or level earth, benches, planters, railings, or curbs. Edge protection also provides a guide for people with visual impairments.

Overhanging and Protruding Objects: Bushes and trees that overhang sidewalks, block sunlight or artificial light, or drop seeds or other debris on walkways should be trimmed regularly or removed.

Other objects which overhang or protrude onto walks such as mailboxes, lamp posts, or signs can be a danger to people who are unobservant or visually impaired. As a general rule, objects that are between 27 inches and 80 inches above the walking surface should not project more than 4 inches onto walks . Objects that have any part at or below 27 inches are detectable by most people who are visually impaired and use detection canes. When replacing objects around walks, evaluate and adjust location to meet these criteria as appropriate.

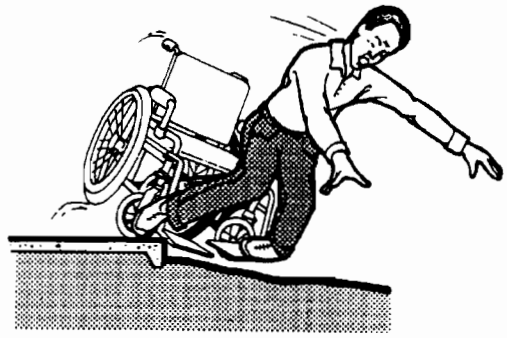

Lack of Edge Protection at Walk With Drop-Off

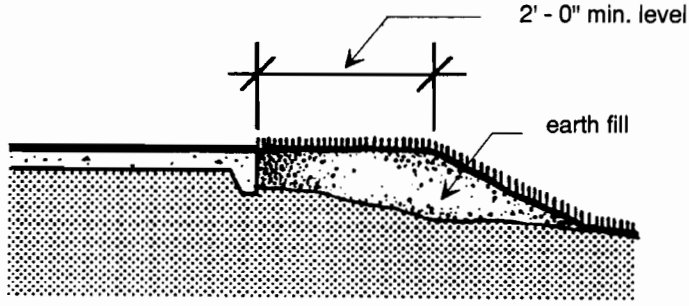

Earth and Grass Protection at Drop-Off

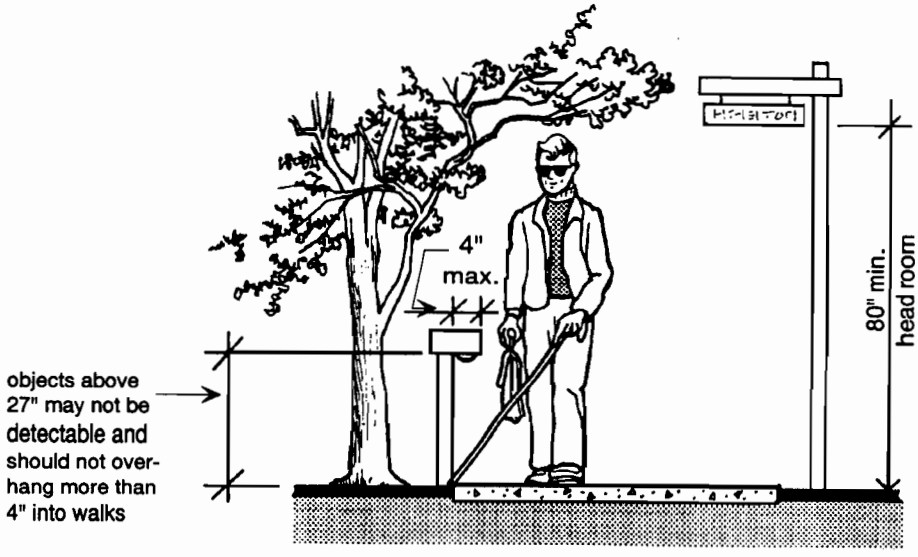

Additional Changes to Meet Temporary or Individual Needs

- **Use portable ramps.**
- **Use plastic or rubber movable mats** to provide an accessible route over loose or slippery ground surfaces such as gravel, dirt, or grass.
- **Install bevels** at small level changes.
- **Install detectable warnings or barriers** beneath protruding and overhanging objects.

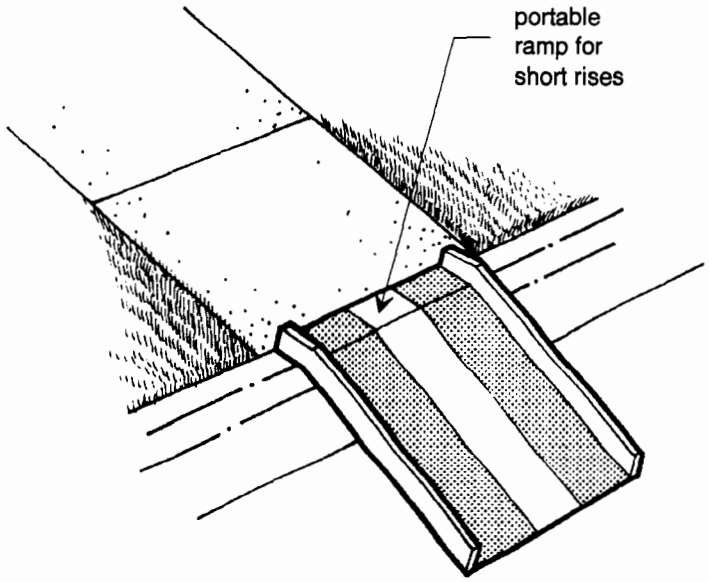

Temporary Portable "Curb" Ramp

Accessible Parking and Site Paths

An accessible route is a critical component of a universally usable exterior environment. Because the features of an accessible walk or parking space are integral with initial site planning and grading issues, they may be difficult and prohibitively costly to address during typical home modification or repair projects such as repaving or repairing broken surfaces. However, alteration or total rehab projects that impact the site, such as installing new walks, replacing existing parking lots, or constructing additions offer the opportunity to improve these areas.

The extent and level of accessibility will vary depending on local site conditions, such as existing grades and weather conditions. State, local, or federal accessibility requirements may be an issue when changes are made to common area walks and parking lots used by multiple tenants or the general public.

Regardless of compliance issues, the major accessibility standards and guidelines listed in *Appendix A* provide minimum specifications for the design of parking spaces and walks. Publications listed in *Appendix B* provide additional information, guidance, and examples on accessible parking areas and walkways.

APPENDIX A

ACCESSIBILITY STANDARDS

As stated in the Introduction, information in this publication is intended for use in home modification, remodeling, and rehabilitation projects which are usually not subject to local, state, or Federal accessibility standards. Accessibility standards are intended for public and government buildings and certain assisted housing. They provide technical specifications and guidance for creating fully accessible or adaptable space. Although private homes are usually not subject to these standards, they may provide technical guidance to homeowners and remodelers planning a project to maximize accessibility for a resident with specific physical limitations. The most widely used Federal accessibility legislation/standards follow.

- **American National Standard for Buildings and Facilities - Providing Accessibility and Usability for Physically Handicapped People (ANSI A117.1 1992)**

  ANSI, a non-governmental national organization, adopted minimum requirements for accessibility in 1961, forming the technical basis for the first Federal and state accessibility standards. Standards for accessible housing were included in the 1980 edition. The 1992 version, based on ANSI A117.1 1986, was created as a model code for local governments and for organizations setting model codes. The Council of American Building Officials (CABO) serves as ANSI secretariat to develop the 1995 version (publication expected in 1997). ANSI 117.1 1992 is followed in varying degrees throughout the country.

  Available from:

  American National Standards Institute
  Sales Department
  1430 Broadway
  New York, NY 10018
  (212) 642-4900
  or
  Council of American Building Officials
  5204 Leesburg Pike
  Suite 708
  Falls Church, VA 22041
  (703) 931-4533

- **Uniform Federal Accessibility Standards (UFAS)**

  UFAS was created as the uniform accessibility standard for all buildings constructed, altered, or leased by the Federal government, and for private buildings that house programs funded by the Federal government.

  Available from:

  Superintendent of Documents
  U.S. Government Printing Office
  P. O. Box 371954
  Pittsburgh, PA 15250-7954
  (202) 512-1800 - Washington, DC line

- **Americans with Disabilities Act Accessibility Guidelines (ADAAG)**

  The ADA Accessibility Guidelines set minimum requirements for compliance with Title III of the Americans with Disabilities Act (ADA) that prohibits discrimination on the basis of disability in public accommodations and commercial facilities topics including lodging, restaurants, public gathering places. The illustrated ADAAG include specifications on accessible routes, ramps, doors, storage, and bathrooms. An appendix offers rationale for many dimensions.

  Available from:

  Department of Justice
  Office of the Americans with Disabilities Act
  Civil Rights Division
  P.O. Box 66738
  Washington, DC 20530-6738
  (202) 307-0663

- **Fair Housing Accessibility Guidelines** (effective for building occupancy after 3/13/91)

  The Guidelines provide technical guidance on the design and construction of elevated multi-family buildings consisting of four or more dwelling units, or ground floor units in other buildings of four or more units, to comply with the accessibility requirements of the Fair Housing Act Amendments of 1988. The guidelines address:

  - Accessible building entrances on an accessible route;
  - Accessible and usable public and common use areas;
  - Usable doors;
  - Accessible route into and through the dwelling unit;
  - Light switches, electrical outlets, thermostats, and other environmental controls;
  - Reinforced walls for grab bars; and,
  - Usable kitchens and bathrooms.

Available from:

State or Area HUD offices
or
Office of Fair Housing and Equal Opportunity
U.S. Department of Housing and Urban Development
451 Seventh Street, SW
Room 5240
Washington, DC 20410-2000
or
Fair Housing Clearinghouse
(800) 343-3442

APPENDIX B

GUIDEBOOKS and REFERENCES

Access Information Bulletins
Paralyzed Veterans of America
801 18th Street, NW
Washington, DC 20006
(202) 872-1300

Accessibility Reference Guide,
An Illustrated Commentary on
U.B.C. Chapter 31 and CABO/ANSI A117.1
International Conference of Building
Officials (ICBO)
ICBO Order Department
5360 Workman Mail Road
Whittier, CA 90601
(310) 692-4226

Accessible Housing Design File
Barrier Free Environments, Inc. (1991)
Van Nostrand Reinhold
7625 Empire Drive
Florence, KY 41042
(800) 842-3636

Adaptable Housing
U.S. Department of Housing
and Urban Development (1987)
HUD User
Fair Housing Information Clearinghouse
P.O. Box 9146
McLean, VA 22102
(800) 343-3442

Building for a Lifetime
Wylde, M., A. Barron-Robbins,
S. Clark (1994)
Taunton Press, Inc.
63 S. Main Street
Newtown, CT 06470
(203) 426-8171

CAH Selected Reading List
Center for Universal Design
NC State University
Box 8613
Raleigh, NC 27695
(919) 515-3082

Comprehensive Approach to
Retrofitting Homes for a Lifetime
NAHB Research Center, Inc. (1991)
400 Prince George's Blvd.
Upper Marlboro, MD 20774
(301) 249-4000
(800) 638-8556

1996 Directory of Accessible
Building Products
NAHB Research Center, Inc.
400 Prince George's Blvd.
Upper Marlboro, MD 20774
(301) 249-4000
(800) 638-8556

Enabling Products Sourcebook
M. Wylde (1995)
National Kitchen and Bath Association
687 Willow Grove Street
Hackettstown, NJ 07840
(908) 852-0033
(800) THE-NKBA

Low Vision Information
The Lighthouse, Inc.
111 East 59th Street
New York, NY 10022
(800) 334-5497

The 1995 Accessible Building Product Guide
J. Salmen and P. S. & J. Quarve Peterson
Universal Designers and Consultants, Inc.
1700 Rockville Pike
Suite 110
Rockville, MD 20852
(301) 770-7890

Universal Bathroom Planning
M. J. Peterson (1995)
National Kitchen and Bath Association
687 Willow Grove Street
Hackettstown, NJ 07840
(908) 852-0033
(800) THE-NKBA

Universal Kitchen Planning
M. J. Peterson (1995)
National Kitchen and Bath Association
687 Willow Grove Street
Hackettstown, NJ 07840
(908) 852-0033
(800) THE-NKBA

APPENDIX C

RESOURCES

ABLEDATA
8455 Colesville Road
Suite 935
Silver Spring, MD 20910
(800) 227-0216

Adaptive Environments Lab
State University of New York
at Buffalo
School of Architecture and Planning
Buffalo, NY 14214
(716) 645-2000

American Association of Retired Persons
601 E Street, NW
Washington, DC 20049
(202) 434-2277

American Foundation for the Blind
11 Pen Plaza
Suite 300
New York, NY 10001
(212) 502-7600

American OT Association, Inc.
4720 Montgomery Lane
P.O. Box 31220
Bethesda, MD 20824-1220
(301) 652-2682

Architectural and Transportation Barriers
Compliance Board
1331 F Street, NW
Suite 1000
Washington, DC 20004
(202) 272-5434

Barrier Free Environments, Inc.
P.O. Box 30634
Raleigh, NC 27622
(919) 782-7823

National Council on Independent Living
2111 Wilson Blvd.
Suite 405
Arlington, VA 22201
(703) 525-3406

National Eldercare Institute
Andros Gerontology Center
University of Southern California
University Park MC-0191
Los Angeles, CA 90089-0191
(213) 740-1364

The Center for Universal Design
Box 8613
NC State University
Raleigh, NC 27695-8613
(919) 515-3082

U. S. Department of Housing and Urban Development
451 Seventh Street, S.W.
Washington, D.C. 20410

OFFICIAL BUSINESS
PENALTY FOR PRIVATE USE $300

HUD-1604-PDR
June 1996

U.S. DEPARTMENT OF HOUSING AND URBAN DEVELOPMENT

EQUAL HOUSING OPPORTUNITY